TENTATIVE AGENDA
RAYTOWN BOARD OF ALDERMEN
MAY 20, 2025
REGULAR SESSION NO. 3
RAYTOWN CITY HALL
10000 EAST 59TH STREET
RAYTOWN, MISSOURI 64133
7:00 P.M.
AND
ONLINE ZOOM WEBINAR

ZOOM.US/JOIN
WEBINAR ID: 854 8654 9878
PASSCODE: 342704

Invocation/Pledge of Allegiance
Roll Call

Public Comments

Comments from the Mayor
Comments from the City Administrator
Committee Reports

STUDY SESSION

Fiscal Year 2023-2024 Audit Presentation
Troutt Beeman & Co. P.C

LEGISLATIVE SESSION

1. CONSENT AGENDA
All matters listed under the Consent Agenda are considered to be routine by the Board of Aldermen and will be enacted by one motion without separate discussion or debate. An item designated for the Consent Agenda may be removed from the Consent Agenda at the request of the Mayor or an Alderman, where there is no objection by the remaining members of the Board. If there is an objection to removal of an item from the Consent Agenda, the item may be removed by a motion and vote of the Board.

1a. Approval of the Minutes from the May 6, 2025 Board of Aldermen meeting

REGULAR AGENDA

NEW BUSINESS

2. R-3710-25: A RESOLUTION AUTHORIZING AND APPROVING AN AGREEMENT WITH MO TURF FOR NUISANCE ABATEMENT SERVICES IN AN AMOUNT NOT TO EXCEED $95,000.00 FOR FISCAL YEAR 2024-2025. Point of Contact: Diane Egger, Community Development Director.

3. **R-3711-25: A RESOLUTION** AUTHORIZING EXPENDITURE OF ADDITIONAL FUNDS THROUGH A CHANGE ORDER WITH ROYAL CONSTRUCTION SERVICES FOR THE POLICE DEPARTMENT ANNEX BUILDING DEMOLITION AND CONSTRUCTION PROJECT IN AMOUNT NOT TO EXCEED $10,492.33 FOR A TOTAL PROJECT AMOUNT NOT TO EXCEED $560,472.33 FOR FISCAL YEAR 2024-2025. Point of Contact: Robinson Camp, Public Works Director.

CLOSED SESSION

Notice is hereby given that the Mayor and Board of Aldermen may conduct a closed session, pursuant to the following statutory provisions:

610.021 (2) Leasing, purchase or sale of real estate by a public governmental body where public knowledge of the transaction might adversely affect the legal consideration therefore;

610.021(3) Hiring, firing, disciplining or promoting of particular employees by a public governmental body when personal information relating to the performance or merit of an individual employee is discussed or recorded; and/or

610.021(13) Individually identifiable personnel records, performance ratings or records pertaining to employees or applicants for employment.

ADJOURNMENT

CITY OF RAYTOWN, MISSOURI

FINANCIAL STATEMENTS

FOR THE YEAR ENDED
OCTOBER 31, 2024

INTRODUCTORY SECTION

MANAGEMENT'S DISCUSSION AND ANALYSIS……. iii

FINANCIAL SECTION

INDEPENDENT AUDITOR'S REPORT 1

BASIC FINANCIAL STATEMENTS:
Government-Wide Financial Statements:
Statement of Net Position..... 4
Statement of Activities 5

Government Fund Financial Statements:
Balance Sheet..... 6
Reconciliation of the Governmental Funds Balance Sheet to the Statement of Net Position 7
Statement of Revenues, Expenditures, and Changes in Fund Balance 8
Reconciliation of the Statement of Revenues, Expenditures, and Changes in Fund Balances of Governmental Funds to the Statement of Activities 9

Proprietary Fund Financial Statements:
Statement of Net Position..... 10
Statement of Revenues, Expenses, and Changes in Fund Net Position 11
Statement of Cash Flows 12

Fiduciary Fund Financial Statements:
Statement of Net Position 13
Statement of Changes in Net Position.....14

Notes to Financial Statements 15

REQUIRED SUPPLEMENTAL INFORMATION OTHER THAN MD&A:
Schedule of Changes in Net Pension Liability and Related Ratios - LAGERS 52
Schedule of Contributions - LAGERS……. 53
Schedule of Changes in Net Pension Liability and Related Ratios – Police (Frozen) 54
Schedule of Contributions – Police (Frozen)…….. 55
Schedule of Changes in OPEB Liability and Related Ratios..... 56
Schedule of Contributions - OPEB…….. 57
Schedules of Revenues, Expenditures, and Changes in Fund Balance -- Actual and Budget -- Major Funds:
General Fund 59
Transportation Sales Tax Fund 60
TIF Fund 61

SUPPLEMENTAL INFORMATION:

Combining Statements of Non Major Governmental Funds:
Combining Balance Sheet 62
Combining Statement of Revenues, Expenditures, and Changes in Fund Balance 63
Combining Statements of Custodial Funds:
Combining Statement of Fiduciary Net Position 64
Combining Statement of Changes in Fiduciary Net Position 65
Budgetary Comparison Schedules -- Non-Major Governmental Funds 66

CITY OF RAYTOWN, MISSOURI
MANAGEMENT'S DISCUSSION AND ANALYSIS
Year Ending October 31, 2024
Unaudited

The management team for the City of Raytown, Missouri (the City) offers our readers this narrative overview and analysis of the financial activities of the City for the fiscal year ended October 31, 2024.

Finances for this City are multifaceted and quite complex. As such, management desires for this narrative to be informative beyond what is seen on the face of the statements and to discuss the financial activities of the City. We hope you find these comments helpful as you read through them.

Financial Highlights

The assets and deferred outflows for the City of Raytown, Missouri (the City) exceeded its liabilities and deferred inflows at the close of the 2024 fiscal year by $43,668,108 (net position).

The City's total net position increased $6,994,187 from 2023 with governmental activities increased totaling $4,890,676 and business-type activities increased totaling $2,103,511.

The City's General Fund balance increased $1,228,149 to an ending fund balance of $13,212,378 as of the fiscal year ended October 31, 2024.

The City's total long-term obligations decreased $2,602,312 from 2023 with the governmental activities accounting for $1,673,871 decrease, and business-type activities accounting for $928,441 decrease as the City continues to reduce its long-term obligations.

Overview of the Financial Statements

This discussion and analysis is provided as an introduction to the basic financial statements. The basic financial statements consist of three components: government-wide financial statements, fund financial statements, and notes to the basic financial statements. This report also contains required and other supplementary information in addition to the basic financial statements.

Government-wide financial statements. The government-wide financial statements are a broad overview of the City's finances presented in a manner similar to that of a private business. These statements provide both long-term and short-term information about the City's overall financial status.

The statement of net position presents all City's assets, deferred outflows, liabilities, and deferred inflows with the difference reported as net position. Net position is an important measure of the City's overall financial health. The increases and decreases in net position can be monitored to determine whether the City's financial position is improving or deteriorating.

The statement of activities presents information showing how the City's net position changed during the most recent fiscal year. All changes in net position are reported as soon as the underlying event giving rise to the change occurs, regardless of the timing of the related cash flow. Thus, revenues and expenses are reported in this statement for certain items that will only result in cash flows in future fiscal periods (e.g. uncollected taxes and earned but unused vacation leave).

The government-wide financial statements report governmental activities of the City, which are principally supported by taxes and intergovernmental revenues, and business-type activities of the City, which are intended to recover all or a significant portion of their costs through user fees and charges. The governmental activities for the City include general government, parks and recreation, community development and public affairs, public safety, and public works. The business-type activities for the City include the sanitary sewerage system.

Fund financial statements. Fund financial statements focus on individual parts of the City's government. These statements report the City's operations in more detail than the government-wide financial statements. A fund is a grouping of related accounts that is used to maintain control over resources that have been segregated for specific activities or objectives. The City uses fund accounting to ensure compliance with finance-related legal requirements. These funds are divided into three categories: governmental funds, proprietary funds, and fiduciary funds.

Governmental funds. Governmental funds are used to account for essentially the same functions reported as governmental activities in the government-wide financial statements. However, unlike the government-wide financial statements, governmental fund financial statements focus on near-term inflows and outflows of spendable resources, as well as on balances of spendable resources available at the end of the fiscal year. This information may be useful in evaluating the City's near-term financing requirements.

The focus of governmental funds is narrower than that of the government-wide financial statements, thus it is useful to compare the information presented for governmental funds with similar information presented for governmental activities in the government-wide financial statements. This may enable the reader to better understand the long-term impact of the government's near-term financing decisions. Both the governmental fund balance sheet and the governmental fund statement of revenues, expenditures, and changes in fund balances provide a reconciliation to facilitate this comparison between governmental funds and governmental activities.

Proprietary funds. There are two different types of proprietary funds. Enterprise funds are used to report the same functions presented as business-type activities in the government-wide financial statements. Internal service funds are an accounting mechanism used to accumulate and allocate costs internally among the City's various functions. The City currently does not use internal service funds.

Fiduciary funds. Fiduciary funds are used to account for resources held for the benefit of parties outside the government. Fiduciary funds are not reflected in the government-wide financial statements since the resources of those funds are not available to support the City's operations. The accounting used for fiduciary funds is much like that used for proprietary funds.

Notes to the basic financial statements. The notes provide additional information that is essential to obtain a full understanding of the data provided in the government-wide and fund financial statements.

Other information. In addition to the basic financial statements and accompanying notes, this report also contains certain required supplementary information that further explains and supports the information in the financial statements. This report also contains other supplementary information that provides certain combining and individual fund statements and schedules.

Government-Wide Financial Analysis

The following table reflects the condensed Statement of Net Position as of October 31, 2024 and 2023:

CITY OF RAYTOWN, MISSOURI
Condensed Statement of Net Position

	Governmental Activities		Business-Type Activities		Total	
	2024	2023	2024	2023	2024	2023
Current assets	$ 29,662,089	$ 28,447,349	$ 7,785,836	$ 7,842,861	$ 37,447,925	$ 36,290,210
Noncurrent assets	31,252,190	29,637,106	16,147,888	15,964,245	47,400,078	45,601,351
Deferred outflows of resources	2,522,059	2,332,624	239,068	113,811	2,761,127	2,446,435
Total assets and deferred outflows of resources	$ 63,436,338	$ 60,417,079	$ 24,172,792	$ 23,920,917	$ 87,609,130	$ 84,337,996
Current liabilities	$ 5,448,317	$ 4,547,040	$ 2,593,161	$ 3,207,150	$ 8,041,478	$ 7,754,190
Noncurrent liabilities	27,527,293	29,539,023	2,467,957	3,451,301	29,995,250	32,990,324
Deferred inflows of resources	5,881,252	6,642,216	23,042	17,876	5,904,294	6,660,092
Total liabilities and deferred inflows of resources	$ 38,856,862	$ 40,728,279	$ 5,084,160	$ 6,676,327	$ 43,941,022	$ 47,404,606
Net Position:						
Net investment in capital assets	$ 29,325,152	$ 27,611,545	$ 12,855,716	$ 11,586,064	$ 42,180,868	$ 39,197,609
Restricted	9,335,033	9,750,152	496,756	479,740	9,831,789	10,229,892
Unrestricted	[14,080,709]	[17,672,897]	5,736,160	5,178,786	[8,344,549]	[12,494,111]
Total net position	$ 24,579,476	$ 19,688,800	$ 19,088,632	$ 17,244,590	$ 43,668,108	$ 36,933,390

As indicated earlier, net position may serve as a useful indicator of the City's financial position. The City's assets and deferred outflows exceeded its liabilities and deferred inflows by $24,579,476 for the City's governmental activities and $19,088,632 for the City's business-type activities for a total of $43,668,108 at the close of the 2024 fiscal year.

The largest portion of the City's net position, $42,180,868, reflects its net investment in capital assets (e.g., land, construction in progress, buildings, improvements, machinery and equipment, and infrastructure, net of related debt). The City uses capital assets to provide services to citizens; therefore, these assets are not available for future spending.

The City currently has a deficit unrestricted net position related to governmental activities due to the economic development project on 350 Highway. In 2007, the City issued tax increment and sales tax revenue bonds in the amount of $39,990,000 to fund certain development project costs. These bonds were refinanced in September 2019, which improved the payment amounts and shortened the repayment period. Certain debt service payments are subject to annual appropriations, but not backed by the full faith and credit of the City. This obligation has resulted in the City recording the obligation with no reportable capital asset.

The following table reflects the revenues and expenses from the City's activities for the years ended October 31, 2024 and 2023.

CITY OF RAYTOWN, MISSOURI
Changes in Net Position

	Governmental Activities		Business-Type Activities		Total	
	2024	2023	2024	2023	2024	2023
Revenues:						
Program revenues:						
Charges for services	$ 961,424	$ 1,144,277	$ 8,328,503	$ 7,756,755	$ 9,289,927	$ 8,901,032
Operating grants and contributions	1,740,216	1,881,887	-	-	1,740,216	1,881,887
Capital grants and contributions	345,702	7,334	220,017	-	565,719	7,334
General revenues:						
Property tax	2,024,701	1,999,345	-	-	2,024,701	1,999,345
Sales tax	11,686,031	11,131,765	-	-	11,686,031	11,131,765
Franchise tax	3,768,988	3,881,133	-	-	3,768,988	3,881,133
Intergovernmental activity tax	1,637,954	1,486,097		-	1,637,954	1,486,097
Miscellaneous	196,977	295,669	101,864	87	298,841	295,756
Investment earnings	1,343,746	1,178,015	329,451	371,549	1,673,197	1,549,564
Total revenues	23,705,739	23,005,522	8,979,835	8,128,391	32,685,574	31,133,913
Expenses:						
General government	3,439,205	2,276,503	-	-	3,439,205	2,276,503
Parks and recreation	1,190,671	1,166,750	-	-	1,190,671	1,166,750
Community development	1,334,333	1,122,023	-	-	1,334,333	1,122,023
Public safety	7,525,611	7,318,882	-	-	7,525,611	7,318,882
Public works	4,721,791	4,545,591	-	-	4,721,791	4,545,591
Interest on long term debt	603,452	667,767	-	-	603,452	667,767
Sewer	-	-	6,876,324	6,657,150	6,876,324	6,657,150
Total expenses	18,815,063	17,097,516	6,876,324	6,657,150	25,691,387	23,754,666
Change in net position	4,890,676	5,908,006	2,103,511	1,471,241	6,994,187	7,379,247
Net position, beginning as restated	19,688,800	13,780,794	17,244,590	15,773,349	36,933,390	29,554,143
Net position, ending	$ 24,579,476	$ 19,688,800	$ 19,348,101	$ 17,244,590	$ 43,927,577	$ 36,933,390

Governmental Activities

Governmental activities increased the City's net position by $4,890,676. Governmental fund revenues increased $700,217 over 2023. The largest single revenue category for the City of Raytown remains taxes, including property, sales, and franchise taxes. This line totaled $17,479,721 or 74% of total governmental revenue.

Governmental activities expenses increased $1,717,547 for the fiscal year ended October 31, 2024, compared to the prior year.

Business-type Activities

The Sanitary Sewer Fund is responsible for the total business-type activities for the City. In 2024, operating revenues increased by $649,469. Business-type operating expenses increased $252,605 from 2023. The expenses in these statements do not include principal and premium payments made to the sewer bonds of $1,086,009, the change in net position with this included would result in an increase of $931,940.

Financial Analysis of the City's Funds

Governmental Funds

As of the end of the 2024 fiscal year, the City's governmental funds have a combined fund balance of $23,774,856, which represents an increase of $1,172,555 over 2023. This can largely be attributed to lower than budgeted expenses, increase in Local Use Tax/Marijuana tax, and Investment earnings with positive shift in interest rates.

General Fund

The fund balance of the General Fund increased $1,228,149 during the fiscal year compared to a $2,561,812 increase in 2023. The General Fund unassigned ending fund balance was $11,467,532 or 79% of current year revenues and 85% of current year expenditures and transfers out.

The General Fund revenues were $14,599,078 compared to $14,529,515 in 2023 which represents an increase of 0.48% over 2023. Investment earnings saw an increase of $93,935 from 2023 due to an increase of interest rates. The majority of the increase in taxes of $364,972 was due to an increase in tax receipts.

General Fund expenditures, including transfers out, were $14,737,963 compared to $13,416,848 in 2023 which represents an increase of $1,321,115 or 10%. A majority of this increase was due to successful recruitment of police officers bringing the number of current employees closer to budgeted positions.

Tax Increment Finance Fund

The TIF Fund revenues were $1,818,765 compared to $1,564,332 in 2023, which represents an increase of $254,433. The majority of the increase was due to increased sales tax coming in from the TIF sales.

The TIF Fund expenditures were $3,207,600 compared to $3,144,701 in 2023 which represents a stable expense trend for the TIF Bonds and Debt Service.

The ending fund balance of the Tax Increment Finance (TIF) Fund was $4,189,283 on October 31, 2024, an increase of $183,977 from 2023.

Transportation Sales Tax Fund

The fund balance of the Transportation Sales Tax Fund decreased $421,897 during the fiscal year. This is due to higher fund balance usage related to street projects.

Other Governmental Funds (Combined)

Other Governmental funds represent multiple combined funds which include Park, Risk Management, Capital Improvements, Capital Sales Tax, Public Safety Sales Tax, and Stormwater funds. These funds are combined for reporting purposes only.

The other Governmental funds combined revenues and transfers in 2024 were $6,104,216 compared to $5,305,503 in 2023, which includes an increase in capital projects in the Capital Sales Tax Fund and the Storm Water Fund.

Combined expenditures and transfers out for other Governmental Funds were $5,927,596 compared to $4,216,759 in 2023 which represents a increase of $1,710,837. This is related to the transfer of ARPA Grant funds for construction projects. The capital improvements for the Stormwater Maintenance project and Park redevelopment projects commenced in 2024 and with an estimated completion in 2025.

The combined fund balance of the other governmental funds increased $182,326 to an ending balance of $6,122,875 as of October 31, 2024.

Proprietary Funds

The City's proprietary fund statements provide the same type of information found in the government-wide statements but in more detail.

The Sanitary Sewer fund operating revenues were consistent with prior years in 2024 coming in at $8,328,503 compared to operating revenues of $7,756,755 in 2023. Operating expenses increased $105,663 due to the average rise in the cost of sewer treatment of approximately 5% per year.

The net position of the Sanitary Sewer fund at the end of the year increased by $2,103,511 to an ending balance of $19,088,632. Of the ending net position $12,855,716 is the City's investment in capital assets. The amount of $496,756 is restricted for debt service and $5,736,160 is unrestricted. The City is attempting to build an unrestricted net position to provide stability in funding for needed infrastructure and maintenance in future years.

General Fund Actual to Budget Analysis

Actual revenues and transfers in were $239,269 less than the final budget. Actual expenditures and transfers out were $2,097,209 less than the final budget. The positive variance occurred across most departments and functions primarily related to personnel costs due to some vacancies in personnel positions as previously mentioned.

The City far exceeded City Resolution 2039-08 requiring a contingency reserve equal to 17% of the prior year expenditures. This creates an excellent cushion in the case of an unforeseen crisis.

Capital Asset Administration

The City's investment in capital assets for its governmental and business-type activities as of October 31, 2024, amounts to $45,460,236 compared to $43,564,787 in 2023 (net of accumulated depreciation). The increase of $1,895,449 is the purchase of equipment and investment into infrastructure. Capital assets also includes land, buildings, improvements, collection systems, and machinery.

The following table reflects the capital asset activity for the years ended October 31, 2024 and 2023:

CITY OF RAYTOWN, MISSOURI
Capital Assets (Net of Depreciation)

	Governmental Activities		Business-Type Activities		Total	
	2024	2023	2024	2023	2024	2023
Land	$ 1,502,090	$ 1,502,090	$ 433,393	$ 433,393	$ 1,935,483	$ 1,935,483
Construction in progress	3,443,665	1,791,021	843,525	494,093	4,287,190	2,285,114
Buildings and improvements	2,928,566	3,194,170	-	-	2,928,566	3,194,170
Equipment and vehicles	2,541,514	2,290,149	117,788	98,524	2,659,302	2,388,673
Infrastructure	18,896,513	18,823,110	14,753,182	14,938,235	33,649,695	33,761,345
Total	$ 29,312,348	$ 27,600,540	$ 16,147,888	$ 15,964,245	$ 45,460,236	$ 43,564,785

For additional information on capital assets, see Note 4 to the basic financial statements.

Debt Administration

At the end of fiscal year 2024, the City had a total of $34,220,944 outstanding debt compared to $36,896,148 in 2023. This was a decrease of $2,675,204 from the previous year, largely due to the continued Debt Service payments for the sewer and TIF bond principal.

The following table reflects changes in the City's long-term debt for the years ended October 31, 2024 and 2023:

CITY OF RAYTOWN, MISSOURI
Long-Term Debt Analysis

	Governmental Activities		Business-Type Activities		Total	
	2024	2023	2024	2023	2024	2023
Tax increment and sales tax revenue bonds (including premium)	$ 18,320,000	$ 20,615,000	$ -	$ -	$ 18,320,000	$ 20,615,000
Revenue bonds (including premium)	-	-	3,265,075	4,378,182	3,265,075	4,378,182
Compensated absences	1,212,762	577,710	57,448	38,868	1,270,210	616,578
Net Pension	10,256,146	9,942,734	274,298	129,076	10,530,444	10,071,810
Developer obligation	304,787	586,794	-	-	304,787	586,794
Net OPEB obligation	255,442	300,770	23,819	30,053	279,261	330,823
SBITA Agreements	251,167	296,961	-	-	251,167	296,961
Total	$ 30,600,304	$ 32,319,969	$ 3,620,640	$ 4,576,179	$ 34,220,944	$ 36,896,148

Requests for Information

This financial report is designed to provide the reader with a general overview of the City's finances. Questions or requests for more information concerning any of the information provided in this report should be directed to Finance Director, Finance Department, City of Raytown, 10000 E 59th Street, Raytown, MO 64133.

Troutt Beeman & Co., P.C.
CPAs & BUSINESS ADVISORS

INDEPENDENT AUDITOR'S REPORT

To the Honorable Mayor
and Members of the
Board of Alderman
City of Raytown, Missouri

Report on the Audit of the Financial Statements

Opinions

We have audited the financial statements of the governmental activities, the business-type activities, each major fund, and the aggregate remaining fund information of the City of Raytown, Missouri (the City), as of the year ended October 31, 2024, and the related notes to the financial statements, which collectively comprise the City's basic financial statements as listed in the table of contents.

In our opinion, the accompanying financial statements present fairly, in all material respects, the respective financial position of the governmental activities, the business-type activities, the aggregate discretely presented component units, each major fund, and the aggregate remaining fund information of the City, as of October 31, 2024, and the respective changes in financial position and, where applicable, cash flows thereof for the year then ended in accordance with accounting principles generally accepted in the United States of America.

Basis for Opinions

We conducted our audit in accordance with auditing standards generally accepted in the United States of America (GAAS). Our responsibilities under those standards are further described in the Auditor’s Responsibilities for the Audit of the Financial Statements section of our report. We are required to be independent of the City and to meet our other ethical responsibilities, in accordance with the relevant ethical requirements relating to our audit. We believe that the audit evidence we have obtained is sufficient and appropriate to provide a basis for our audit opinions.

Responsibilities of Management for the Financial Statements

Management is responsible for the preparation and fair presentation of the financial statements in accordance with accounting principles generally accepted in the United States of America; and for the design, implementation, and maintenance of internal control relevant to the preparation and fair presentation of financial statements that are free from material misstatement, whether due to fraud or error.

In preparing the financial statements, management is required to evaluate whether there are conditions or events, considered in the aggregate, that raise substantial doubt about the City's ability to continue as a going concern for fifteen months beyond the financial statement date, including any currently known information that may raise substantial doubt shortly thereafter.

Auditor's Responsibilities for the Audit of the Financial Statements

Our objectives are to obtain reasonable assurance about whether the financial statements as a whole are free from material misstatement, whether due to fraud or error, and to issue an auditor's report that includes our opinions. Reasonable assurance is a high level of assurance but is not absolute assurance and therefore is not a guarantee that an audit conducted in accordance with GAAS will always detect a material misstatement when it exists. The risk of not detecting a material misstatement resulting from fraud is higher than for one resulting from error, as fraud may involve collusion, forgery, intentional omissions, misrepresentations, or the override of internal control. Misstatements are considered material if there is a substantial likelihood that, individually or in the aggregate, they would influence the judgment made by a reasonable user based on the financial statements.

In performing an audit in accordance with GAAS, we:

- Exercise professional judgment and maintain professional skepticism throughout the audit.
- Identify and assess the risks of material misstatement of the financial statements, whether due to fraud or error, and design and perform audit procedures responsive to those risks. Such procedures include examining, on a test basis, evidence regarding the amounts and disclosures in the financial statements.
- Obtain an understanding of internal control relevant to the audit in order to design audit procedures that are appropriate in the circumstances, but not for the purpose of expressing an opinion on the effectiveness of the City's internal control. Accordingly, no such opinion is expressed.
- Evaluate the appropriateness of accounting policies used and the reasonableness of significant accounting estimates made by management, as well as evaluate the overall presentation of the financial statements.
- Conclude whether, in our judgment, there are conditions or events, considered in the aggregate, that raise substantial doubt about the City's ability to continue as a going concern for a reasonable period of time.

We are required to communicate with those charged with governance regarding, among other matters, the planned scope and timing of the audit, significant audit findings, and certain internal control–related matters that we identified during the audit.

Required Supplemental Information

Accounting principles generally accepted in the United States of America require that the Management's Discussion and Analysis, Missouri Local Government Employees Retirement System, OPEB, and Budgetary Comparison Information on pages iii through ix and 51 through 60 be presented to supplement the basic financial statements. Such information is the responsibility of management and, although not a part of the basic financial statements, is required by the Governmental Accounting Standards Board who considers it to be an essential part of financial reporting for placing the basic financial statements in an appropriate operational, economic, or historical context. We have applied certain limited procedures to the required supplementary information in accordance with auditing standards generally accepted in the United States of America, which consisted of inquiries of management about the methods of preparing the information and comparing the information for consistency with managements responses to our inquiries, the basic financial statements, and other knowledge we obtained during our audit of the basic financial statements. We do not express an opinion or provide any assurance on the information because the limited procedures do not provide us with sufficient evidence to express an opinion or provide any assurance.

Supplementary Information

Our audit was conducted for the purpose of forming opinions on the financial statements that collectively comprise the City of Raytown, Missouri's basic financial statements. The combining and individual non-major fund financial statements and other budgetary schedules are presented for purposes of additional analysis and are not a required part of the basic financial statements.

The combining and individual non-major fund financial statements and budgetary schedules are the responsibility of management and were derived from and relate directly to the underlying accounting and other records used to prepare the financial statements. We have applied certain limited procedures to the supplementary information in accordance with auditing standards generally accepted in the United States of America, which consisted of inquiries of management about the methods of preparing the information and comparing the information for consistency with managements responses to our inquiries, the basic financial statements, and other knowledge we obtained during our audit of the basic financial statements. We do not express an opinion or provide any assurance on the information because the limited procedures do not provide us with sufficient evidence to express an opinion or provide any assurance.

Truitt, Beemer & Co., P.C.
Harrisonville, Missouri
April 24, 2025

CITY OF RAYTOWN, MISSOURI
STATEMENT OF NET POSITION
OCTOBER 31, 2024

	Primary Government		
	Governmental Activities	Business-type Activities	Total
ASSETS			
Pooled cash and investments	$ 17,617,444	$ 4,949,316	$ 22,566,760
Cash and investments-restricted	7,885,513	496,756	8,382,269
Taxes receivable, net	2,237,295	-	2,237,295
Due from other governments	593,925	-	593,925
Grants receivable	64,415	-	64,415
Accrued interest	38,054	8,746	46,800
Accounts receivable, net	102,064	2,274,651	2,376,715
Loan receivable	196,402	-	196,402
Fines receivable, net	10,848	-	10,848
Due from other funds	19,079	(19,079)	-
Inventories	29,499	-	29,499
Prepaid expenses	867,551	75,446	942,997
Lease receivable	641,439	-	641,439
Land held for future use	1,034,432	-	1,034,432
Right of use assets - SBITA (net of amortization)	263,971	-	263,971
Capital assets:			
Land and construction in progress	4,945,755	1,276,918	6,222,673
Buildings and improvements	7,706,605	-	7,706,605
Vehicles and equipment	10,192,210	813,160	11,005,370
Distribution system	-	29,870,997	29,870,997
Infrastructure	73,409,680	-	73,409,680
Less: accumulated depreciation	(66,941,902)	(15,813,187)	(82,755,089)
Total capital assets	29,312,348	16,147,888	45,460,236
Total assets	60,914,279	23,933,724	84,848,003
DEFERRED OUTFLOWS OF RESOURCES			
Other post-employment benefits	102,203	10,708	112,911
Debt refunding	-	15,235	15,235
Pension	2,419,856	213,125	2,632,981
Total deferred outflows of resources	2,522,059	239,068	2,761,127
Total assets and deferred outflows of resources	63,436,338	24,172,792	87,609,130
LIABILITIES			
Accounts payable and accrued expenses	2,114,209	532,280	2,646,489
Retainage	65,864	17,812	83,676
Unapplied payments	-	126,764	126,764
Customer deposits	25,370	692,728	718,098
Courts bonds payable	50,126	-	50,126
Long-term liabilities:			
Due within one year:			
Bonds, leases, and contracts	2,417,214	1,122,332	3,539,546
Compensated absences	627,600	57,488	685,088
Accrued interest	147,934	43,757	191,691
Due in more than one year:			
Bonds, leases, and contracts	16,153,953	2,169,840	18,323,793
Net pension	10,256,146	274,298	10,530,444
Developer obligations	304,787	-	304,787
Other post-employment benefits	227,245	23,819	251,064
Compensated absences	585,162	-	585,162
Total liabilities	32,975,610	5,061,118	38,036,728
DEFERRED INFLOWS OF RESOURCES			
American rescue plan act (ARP)	4,680,596	-	4,680,596
Wellness credit	19,376	-	19,376
Debt refunding	112,169	-	112,169
Other post-employment benefits	219,925	23,042	242,967
Leases	596,736	-	596,736
Pension	252,450	-	252,450
Total deferred inflows of resources	5,881,252	23,042	5,904,294
NET POSITION			
Net investment in capital assets	29,325,152	12,855,716	42,180,868
Restricted for:			
Capital projects	2,318,470	-	2,318,470
Parks	1,039,119	-	1,039,119
Public works	1,576,927	-	1,576,927
Public safety	359,168	-	359,168
Debt service	4,041,349	496,756	4,538,105
Unrestricted	(14,080,709)	5,736,160	(8,344,549)
Total net position	24,579,476	19,088,632	43,668,108
Total liabilities, deferred inflows of resources, and net position	$ 63,436,338	$ 24,172,792	$ 87,609,130

See accompanying notes.

CITY OF RAYTOWN, MISSOURI
STATEMENT OF ACTIVITIES
FOR THE YEAR ENDED OCTOBER 31, 2024

		Program Revenue			Net (Expense) Revenue and Changes in Net Position		
					Primary Government		
Functions/Programs	**Expenses**	**Charges for Services**	**Operating Grants and Contributions**	**Capital Grants and Contributions**	**Governmental Activities**	**Business-type Activities**	**Total**
Primary government:							
Governmental activities:							
General government	$ 3,439,205	$ 296,679	$ 42,350	$ -	$ (3,100,176)	$ -	$ (3,100,176)
Public safety	7,525,611	171,457	19,541	-	(7,334,613)	-	(7,334,613)
Community development	1,334,333	271,524	-	-	(1,062,809)	-	(1,062,809)
Public works	4,721,791	157,650	1,593,173	345,702	(2,625,266)	-	(2,625,266)
Parks and recreation	1,190,671	64,114	85,152	-	(1,041,405)	-	(1,041,405)
Interest on long-term debt	603,452	-	-	-	(603,452)	-	(603,452)
Total governmental activities	18,815,063	961,424	1,740,216	345,702	(15,767,721)	-	(15,767,721)
Business-type activities,							
Water and sewer	6,876,324	8,328,503	-	220,017	-	1,672,196	1,672,196
Total business-type activities	6,876,324	8,328,503	-	220,017	-	1,672,196	1,672,196
Total primary government	$ 25,691,387	$ 9,289,927	$ 1,740,216	$ 565,719	(15,767,721)	1,672,196	(14,095,525)
General revenues:							
Taxes:							
Property taxes, levied for general purposes					1,350,304	-	1,350,304
Property taxes, levied for specific purposes					674,397	-	674,397
Franchise taxes and other taxes					3,768,988	-	3,768,988
Sales taxes					11,686,031	-	11,686,031
Intergovernmental activity tax					1,637,954	-	1,637,954
Investment earnings					1,343,746	329,451	1,673,197
Miscellaneous revenue					176,033	122,808	298,841
Transfers					20,944	(20,944)	-
Total general revenues, special items, and transfers					20,658,397	431,315	21,089,712
Change in net position					4,890,676	2,103,511	6,994,187
Net position - beginning as restated					19,688,800	16,985,121	36,673,921
Net position - ending					$ 24,579,476	$ 19,088,632	$ 43,668,108

See accompanying notes.

CITY OF RAYTOWN, MISSOURI
BALANCE SHEET
GOVERNMENTAL FUNDS
OCTOBER 31, 2024

	General	Transportation Sales Tax	TIF	Other Governmental Funds	Total Governmental Funds
ASSETS					
Pooled cash and investments	$ 10,674,817	$ 1,172,545	$ 314,948	$ 5,455,134	$ 17,617,444
Cash and investments-restricted	4,680,596	-	3,204,917	-	7,885,513
Taxes receivable, net	1,258,805	296,145	21,106	661,239	2,237,295
Accounts receivable, net	87,906	-	-	14,158	102,064
Grants receivable	-	-	-	64,415	64,415
Fines receivable, net	10,848	-	-	-	10,848
Due from other funds	105,956	-	288,827	2,021	396,804
Due from agency funds	-	-	-	-	-
Due from other governments	132,592	-	461,333	-	593,925
Inventory	29,499	-	-	-	29,499
Accrued interest	25,965	1,982	532	9,575	38,054
Lease receivable	641,439	-	-	-	641,439
Loan receivable	-	-	-	196,402	196,402
Land held for future use	1,034,432	-	-	-	1,034,432
Prepaids	680,915	-	-	186,636	867,551
Total assets	$ 19,363,770	$ 1,470,672	$ 4,291,663	$ 6,589,580	$ 31,715,685
LIABILITIES					
Accounts payable	$ 258,116	$ 1,096,556	$ 102,380	$ 233,780	$ 1,690,832
Retainage payable	-	65,864	-	-	65,864
Accrued expenses	399,464	-	-	23,913	423,377
Court bonds payable	50,126	-	-	-	50,126
Due to other funds	130,136	57,932	-	189,636	377,704
Other liabilities	25,370	-	-	-	25,370
Total liabilities	863,212	1,220,352	102,380	447,329	2,633,273
DEFERRED INFLOWS OF RESOURCES					
American rescue plan act	4,680,596	-	-	-	4,680,596
Leases	596,736	-	-	-	596,736
Wellness credit	-	-	-	19,376	19,376
Court fines	10,848	-	-	-	10,848
Total deferred inflows or resources	5,288,180	-	-	19,376	5,307,556
FUND BALANCES					
Nonspendable:					
Prepaids	680,915	-	-	186,636	867,551
Inventory	29,499	-	-	-	29,499
Land held for future use	1,034,432	-	-	-	1,034,432
Restricted:					
Capital projects	-	-	-	2,248,115	2,248,115
Parks and recreation	-	-	-	929,920	929,920
Debt service	-	-	4,189,283	-	4,189,283
Public works	-	250,320	-	1,405,437	1,655,757
Public safety	-	-	-	961,297	961,297
Police and court	-	-	-	-	-
Committed for,					
Emergency reserve	2,109,718	-	-	-	2,109,718
Assigned to:					
General government	-	-	-	88,936	88,936
Cash flow reserve	-	-	-	302,534	302,534
Unassigned	9,357,814	-	-	-	9,357,814
Total fund balances	13,212,378	250,320	4,189,283	6,122,875	23,774,856
Total liabilities, deferred inflows, and fund balances	$ 19,363,770	$ 1,470,672	$ 4,291,663	$ 6,589,580	$ 31,715,685

See accompanying notes.

CITY OF RAYTOWN, MISSOURI
RECONCILIATION OF THE GOVERNMENTAL FUNDS BALANCE SHEET TO THE STATEMENT OF NET POSITION
OCTOBER 31, 2024

Fund balances - total governmental funds	$ 23,774,856
Amounts reported for governmental activities in the Statement of Net Position are different because:	
Capital assets used in governmental activities are not current financial resources and therefore are not reported in this fund financial statement, but are reported in the governmental activities of the Statement of Net Position.	29,312,348
Right of use assets used in governmental activities are not current financial resources and therefore are not reported in this fund financial statement, but are reported in the governmental activities of the Statement of Net Position.	263,971
Interest on long-term debt is not accrued in the governmental funds, but rather is recognized as an expenditure when due.	(147,934)
Deferred pension and other post-employment benefit inflows and outflows are not included in the fund financial statement, but are included in the governmental activities of the Statement of Net Position:	
Inflows	(472,375)
Outflows	2,522,059
	2,049,684
Deferred debt refunding is not included in the fund financial statement, but is included in the governmental activities of the Statement of Net Position:	(112,169)
Other long-term assets are not available to pay for current period and, therefore, are reported as unavailable revenue in the funds.	10,827
Long-term liabilities are not due and payable in the current period and are not included in the fund financial statement, but are included in the government-wide statements:	
Bonds and capital leases	(18,571,167)
Other post-employement benefits	(227,245)
Development obligations	(304,787)
Net pension	(10,256,146)
Compensated absences	(1,212,762)
	(30,572,107)
Net Position of Governmental Activities in the Statement of Net Position	$ 24,579,476

See accompanying notes.

CITY OF RAYTOWN, MISSOURI
STATEMENT OF REVENUES, EXPENDITURES, AND CHANGES IN FUND BALANCE --
GOVERNMENTAL FUNDS
FOR THE YEAR ENDED OCTOBER 31, 2024

	General Fund	Transportation Sales Tax	TIF	Other Governmental Funds	Total Governmental Funds
REVENUES					
Taxes	$ 11,127,209	$ 1,772,271	$ -	$ 4,580,240	$ 17,479,720
Licenses and permits	631,719	-	-	-	631,719
Intergovernmental	1,648,989	-	1,637,954	436,929	3,723,872
Charges for services	102,272	-	-	64,114	166,386
Fees and fines	165,365	-	-	-	165,365
Use of money and property	843,495	46,494	89,425	364,332	1,343,746
Other	80,029	-	-	125,330	205,359
Total revenues	14,599,078	1,818,765	1,727,379	5,570,945	23,716,167
EXPENDITURES					
Current:					
Current expenditures:					
General government	2,470,338	-	-	53,036	2,523,374
Public safety	7,101,122	-	-	410,321	7,511,443
Public works	2,322,908	450,896	-	182,873	2,956,677
Parks and recreation	-	-	-	1,073,008	1,073,008
Community development	1,332,540	-	283,800	-	1,616,340
Capital outlay	170,130	1,420,506	-	2,319,984	3,910,620
Debt service:					
Principal	45,794	-	2,295,000	-	2,340,794
Interest and other charges	9,206	-	628,800	-	638,006
Total expenditures	13,452,038	1,871,402	3,207,600	4,039,222	22,570,262
Excess (deficiency) of revenues over expenditures	1,147,040	(52,637)	(1,480,221)	1,531,723	1,145,905
OTHER FINANCING SOURCES (USES)					
Sale of capital assets	-	-	-	5,706	5,706
Transfers in	1,367,034	-	1,664,198	533,271	3,564,503
Transfers out	(1,285,925)	(369,260)	-	(1,888,374)	(3,543,559)
Total other financing sources and (uses)	81,109	(369,260)	1,664,198	(1,349,397)	26,650
Net change in fund balances	1,228,149	(421,897)	183,977	182,326	1,172,555
Fund balances - beginning	11,984,229	672,217	4,005,306	5,940,549	22,602,301
Fund balances - ending	$ 13,212,378	$ 250,320	$ 4,189,283	$ 6,122,875	$ 23,774,856

See accompanying notes.

CITY OF RAYTOWN, MISSOURI

RECONCILIATION OF THE STATEMENT OF REVENUES, EXPENDITURES, AND CHANGES IN FUND BALANCES OF GOVERNMENTAL FUNDS TO THE STATEMENT OF ACTIVITIES FOR THE YEAR ENDED OCTOBER 31, 2024

Net change in fund balances - total governmental funds:	$	1,172,555
Amounts reported for governmental activities in the Statement of Activities are different because:		
Governmental funds report outlays for capital assets as expenditures because such outlays use current financial resources. In contrast, the Statement of Activities reports only a portion of the outlay as expense. This is the amount by which capital outlays, which are over the capitalization threshold, exceeded depreciation in the current period:		
Capital outlay		3,910,620
Loss on capital asset disposal		(35,032)
Capital outlay in other functions		84,893
Depreciation and amortization expense		(2,292,668)
		1,667,813
Governmental funds report debt proceeds as current financial resources. In contrast, the Statement of Activities treats such issuance of debt as a liability. Governmental funds report repayment of debt principal as an expenditure. In contrast, the Statement of Net Position reports repayment as a reduction to long-term liabilities. This is the amount by which proceeds exceed repayments,		
Repayment of principal		2,340,794
Some expenses reported in the Statement of Activities do not require the use of current financial resources and these are not reported as expenditures in governmental funds:		
Deferred debt refunding		16,024
Deferred court fines		(2,046)
Pension expense		30,051
Accrued interest not reflected on governmental funds		18,530
Developer obligation		282,007
Compensated absences		(635,052)
		(290,486)
Change in net position of governmental activities	$	4,890,676

See accompanying notes.

CITY OF RAYTOWN, MISSOURI
STATEMENT OF NET POSITION
PROPRIETARY FUND
OCTOBER 31, 2024

	Sewer Utility
ASSETS	
Current assets:	
Pooled cash and investments	$ 4,949,316
Cash and investments-restricted	496,756
Receivables, net:	
Billed	619,658
Unbilled	1,654,993
Interest	8,746
Prepaid expenses	75,446
Total current assets	7,804,915
Non-current assets,	
Capital assets, net	16,147,888
Total assets	23,952,803
DEFERRED OUTFLOWS OF RESOURCES	
Other post-employment benefits	10,708
Debt refunding	15,235
Pension	213,125
Total deferred outflows of resources	239,068
Total assets and deferred outflows of resources	$ 24,191,871
LIABILITIES	
Current liabilities:	
Accounts and retainage payable	$ 514,313
Accrued expenses	35,779
Unapplied payments	126,764
Accrued interest payable	43,757
Due to other funds	19,079
Customer deposits	692,728
Compensated absences	57,488
Bonds, notes, and loans payable	1,122,332
Total current liabilities	2,612,240
Non-current liabilities:	
Net pension	274,298
Other post-employment benefits	23,819
Bonds, notes, and loans payable	2,169,840
Total non-current liabilities	2,467,957
Total liabilities	5,080,197
DEFERRED INFLOWS OF RESOURCES	
Other post-employment benefits	23,042
NET POSITION	
Net investment in capital assets	12,855,716
Restricted for debt service	496,756
Unrestricted	5,736,160
Total net position	19,088,632
Total liabilities, deferred inflows of resources, and net position	$ 24,191,871

See accompanying notes.

CITY OF RAYTOWN, MISSOURI
STATEMENT OF REVENUES, EXPENSES, AND CHANGES IN FUND NET POSITION --
PROPRIETARY FUND
FOR THE YEAR ENDED OCTOBER 31, 2024

	Sewer Utility
REVENUES:	
Charges for services	$ 8,328,503
Miscellaneous	122,808
Total operating revenues	8,451,311
OPERATING EXPENSES:	
Personnel services	1,085,644
Contractual services	327,512
Materials and supplies	107,678
Maintenance and repairs	169,803
Sewer services	4,365,751
Depreciation and amortization	666,198
Bad debts	40,227
Total operating expenses	6,762,813
Operating income	1,688,498
NON-OPERATING REVENUES (EXPENSES):	
Intergovernmental	220,017
Interest income	329,451
Transfers out	(20,944)
Interest expense	(113,511)
	415,013
Increase in net position	2,103,511
Total net position - beginning as restated	16,985,121
Total net position - ending	$ 19,088,632

See accompanying notes.

CITY OF RAYTOWN, MISSOURI

STATEMENT OF CASH FLOWS -- PROPRIETARY FUND
FOR THE YEAR ENDED OCTOBER 31, 2024

	Sewer Utility
CASH FLOWS FROM OPERATING ACTIVITIES:	
Received from customers	$ 8,082,640
Payments to employees and fringe benefits	(1,085,655)
Payments for operations	(5,886,875)
Net cash provided by operating activities	1,110,110
CASH FLOWS FROM CAPITAL AND RELATED FINANCING ACTIVITIES:	
Acquisition and construction of capital assets	(849,840)
Principal paid on capital debt and leases	(1,086,009)
Interest paid on capital debt and leases	(127,448)
Net cash used by capital and related financing activities	(2,063,297)
CASH FLOWS FROM INVESTING ACTIVITIES,	
Investment received	329,451
Net decrease in cash and cash equivalents	(424,663)
Cash and cash equivalents, Beginning of the year	5,870,735
Cash and cash equivalents, End of the year	$ 5,446,072
Cash and investments	4,949,316
Restricted cash and investments	496,756
Total cash and restricted cash and investment	$ 5,446,072
Reconciliation of operating income to net cash provided by operating activities,	
Operating income	$ 1,688,498
Adjustments to reconcile operating income to net cash provided by operating activities:	
Depreciation and amortization expense	666,198
Changes in assets and liabilities:	
Receivables, net	(368,671)
Pension related deferrals and assets	18,886
Prepaid items	1,033
Accounts payable and accrued expenses	(909,771)
Accrued interest payable	13,937
Total adjustments	(578,388)
Net cash provided by operating activities	$ 1,110,110

See accompanying notes.

CITY OF RAYTOWN, MISSOURI
STATEMENT OF NET POSITION
FIDUCIARY FUNDS
OCTOBER 31, 2024

	Police Pension Trust	Total Custodial Funds
ASSETS:		
Pooled cash and investments	$ 10,284,014	$ 71,996
Taxes receivable, net	-	77,001
Total assets	$ 10,284,014	$ 148,997
LIABILITIES,		
Due to others	$ -	$ 148,997
NET POSITION,		
Held in trust for pension benefits	$ 10,284,014	$ -

See accompanying notes.

CITY OF RAYTOWN, MISSOURI
STATEMENT OF CHANGES IN NET POSITION
FIDUCIARY FUNDS
OCTOBER 31, 2024

	Police Pension Trust	Total Custodial Funds
Additions:		
Employer contributions	$ 694,362	$ -
Property taxes collected for other governments	-	83,457
Investment earnings:		
Interest and dividends	293,867	1,653
Net appreciation in fair value of investments	1,861,495	-
Total investment earnings	2,155,362	85,110
Total additions	2,849,724	85,110
Deductions:		
Benefits paid	1,492,520	-
Property taxes distributed to other governments	-	84,275
Administrative expenses and other	187,056	835
Total deductions	1,679,576	85,110
Change in net position	1,170,148	-
Net position, beginning of year	9,113,866	-
Net position, end of year	$ 10,284,014	$ -

See accompanying notes.

NOTES TO FINANCIAL STATEMENTS

The Notes to the Financial Statements include a summary of the accounting policies followed and information used by the City that are judged to be most appropriate for full disclosure in the preparation of the financial statements.

1. SUMMARY OF SIGNIFICANT ACCOUNTING POLICIES:

The financial statements of the City of Raytown, Missouri (the City), have been prepared in conformity with generally accepted accounting principles (GAAP) as applied to government units. The Governmental Accounting Standards Board (GASB) is the accepted standard-setting body for establishing governmental accounting and financial reporting principles. The more significant of the City's accounting policies are described below:

Reporting Entity: The City of Raytown, Missouri, was incorporated in 1950 and covers an area of approximately ten square miles in Jackson County, Missouri. Raytown is a fourth class city and operates under the mayor/board of aldermen form of government and provides services to its residents in many areas, including law enforcement, sewer services, community enrichment and development, and various social services. Fire protection and EMS services are provided by a fire district, which is a separate government entity. The City Administrator is the chief administrative officer of the City.

The accompanying financial statements present the City's primary government and its blended component unit: the City of Raytown, Missouri Tax Increment Financing (TIF) Commission (the Commission). The Commission is governed by an eleven-member board. Six members are appointed by the City's Board of Aldermen and the remaining five members are appointed by the respective taxing districts' boards. Although the Commission is legally separate, the Commission is reported as a blended component unit because its sole function is to use TIF as a method to finance economic development through payments in lieu of taxes (PILOTs) and economic activity taxes (EATs). The Commission does not issue separate financial statements.

Government-Wide and Fund Financial Statements: The government-wide financial statements include the statement of net position and the statement of activities. Government-wide statements report information on all of the activities of the City and its component units. G*overnmental activities*, which are normally supported by taxes and governmental revenues, are reported separately from *business-type activities*, which rely to a significant extent on fees and charges for support.

As a general rule the effect of interfund activity has been eliminated from the government-wide financial statements. Exceptions to this general rule are payments in lieu of taxes where the amounts are reasonably equivalent in value to the interfund services provided and other charges between the government's sewer function and various other functions of the government. Elimination of these charges would distort the direct costs and program revenues reported for the various functions concerned.

1. SUMMARY OF SIGNIFICANT ACCOUNTING POLICIES (Continued):

Government-Wide and Fund Financial Statements (Continued):

The statement of activities demonstrates the degree to which the direct expenses of a given function are offset by program revenues. Direct expenses are those that are clearly identifiable with a specific function. Program revenues include: 1) charges to customers or applicants who purchase, use, or directly benefit from goods, services, or privileges provided by a given function and 2) grants and contributions that are restricted to meeting the operational or capital requirements of a particular function or segment. Taxes and other items not properly included among program revenues are reported as general revenues.

Separate fund financial statements are provided for governmental funds and proprietary funds. Major individual governmental funds and the major individual enterprise fund are reported as separate columns in the respective fund financial statements. Non-major funds include other Special Revenue and Capital Projects funds. The combined amounts for these funds are reflected in a single column in the Governmental fund Balance Sheet and Statement of Revenues, Expenditures, and Changes in Fund Balances. Detailed statements for non-major funds are presented with Combining and Individual Fund Statements and Schedules.

Measurement Focus, Basis of Accounting, and Basis of Presentation: The government-wide financial statements are reported using the economic resources measurement focus and the accrual basis of accounting, as are the proprietary fund financial statements. Revenues are recognized when they occur and expenses are recognized when a liability is incurred, regardless of the timing of the related cash flows. Property taxes are recognized as revenues in the following year for which they are levied. Grants and similar items are recognized as revenue as soon as all eligibility requirements imposed by the grantor have been met.

Governmental fund financial statements are reported using the current financial resources measurement focus and the modified accrual basis of accounting. Revenues are recognized as soon as they are both measurable and available. Revenues are considered to be available when they are collectible within the current period or soon enough thereafter to pay liabilities of the current period. For this purpose, the City considers revenues to be available if they are collected within 60 days of the end of the current fiscal period. Expenditures generally are recognized when a liability is incurred, as under accrual accounting. However, debt service expenditures as well as expenditures related to compensated absences, claims, and judgments are reported only when payment is due. General capital asset acquisitions are reported as expenditures in governmental funds. Proceeds of general long-term debt are reported as other financing sources.

1. SUMMARY OF SIGNIFICANT ACCOUNTING POLICIES (Continued):

Measurement Focus, Basis of Accounting, and Basis of Presentation (Continued):

Property taxes that are not available for current year operations are shown as deferred inflows of resources in the Governmental Funds Balance Sheet. Property taxes are levied each year on all taxable real and personal property in the City. The City's property tax is levied each September 1 on the assessed value as of the prior January 1. Property taxes are billed in total by November 1 following the levy date and considered delinquent after January 1. On January 1, a lien attaches to all property for which taxes are unpaid.

Franchise taxes, licenses, and interest associated with the current fiscal period are all considered to be susceptible to accrual and so have been recognized as revenues of the current fiscal period. Charges for sales and services (other than utility) and miscellaneous revenues are generally recorded as revenue when received in cash because they are generally not measurable until actually received.

The City reports the following major governmental funds:

The General Fund is the main operating fund. Expenditures from this fund provide basic City services, such as police protection, planning, inspection, engineering, animal control, civil defense, municipal court, and overall basic services such as finance and data processing, personnel, and general administration of the City.

Revenue sources include taxes, which include property taxes, sales taxes, franchise taxes, and cigarette taxes. Other revenues include other fees and licenses, and revenue gathered from the municipal court and investment earnings.

The Transportation Sales Tax Fund accounts for sales tax collected and other resources to be used for road and bridge projects within the City and operation and maintenance of the City’s streets, curbs, etc.

The TIF Fund accounts for taxes collected and expended for operations of the City’s tax increment financing plans.

The City reports the following non-major governmental funds:

The Park Fund accounts for property taxes levied for health-related programs.

The Capital Sales Tax Fund accounts for incremental property and sales taxes to be used for the maintenance and construction of capital projects.

The Public Safety Sales Tax Fund accounts for the voter-approved sales tax for the public safety.

1. SUMMARY OF SIGNIFICANT ACCOUNTING POLICIES (Continued):

Measurement Focus, Basis of Accounting, and Basis of Presentation (Continued):

The Risk Management Fund accounts for insurance and related expenses not directly attributable to any one department or fund.

The Storm Water Fund accounts for voter approved sales tax for maintenance and improvements for City storm water.

The Capital Improvements Fund accounts for the revenues and expenditures paid for maintaining and improving the City's streets and storm sewer system. The ongoing revenue and expenditures are for the Ditzler CID.

Proprietary fund financial statements are used to account for activities, which are similar to those found in the private-sector. The measurement focus is upon determination of net income, financial position, and cash flows. The City reports the following major proprietary fund:

The Sewer Utility Fund accounts for the provision of sewer services to the residents of the City. All activities necessary to provide such services are accounted for in this fund, including, but not limited to, administration, operations, maintenance, financing, billing, collection, and related debt service.

On the proprietary fund financial statements, operating revenues are those that flow directly from the operations of the activity, i.e., charges to customers or users who purchase or use the goods or services of that activity. Operating expenses are those that are incurred to provide those goods or services. Non-operating revenues and expenses are items such as investment income and interest expense that are not a result of the direct operations of the activity.

Fiduciary fund financial statements are custodial in nature and are merely clearing accounts for assets held by the City as an agent for individuals, private organization, or other governments. Fiduciary funds are excluded from government-wide financial statements.

The Police Pension Trust Fund accounts for the activity of the Policeman's Frozen Retirement Plan.

Agency Funds:

The Raytown Highway 350 Transportation Development District (TDD) Fund accounts for taxes collected on behalf of the TDD.

The Ditzler CID Fund accounts for taxes collected on behalf of the CID.

1. SUMMARY OF SIGNIFICANT ACCOUNTING POLICIES (Continued):

Budgets: The reported budgetary data represents the final approved budget after amendments as adopted by the Board of Alderman. Annual operating budgets are adopted for the General Fund, Special Revenue Funds, Capital Projects Funds, and Proprietary Funds. Missouri law requires budgets to be adopted for all governmental funds. The City prepares its budgets on the modified accrual basis of accounting for its governmental funds and the accrual basis for its proprietary funds. The Board of Alderman has amended the budget at various times during the year and has performed the following procedures in establishing the City's budget:

(1) Prior to September 30, the City Administrator submits to the Board of Alderman a proposed operating budget for the fiscal year commencing the following November 1. The operating budget includes proposed expenditures and the means of financing them.

(2) Public hearings are conducted to obtain taxpayer comments.

(3) Prior to November 1, the budget is legally enacted through the passage of an ordinance.

(4) The City Administrator is authorized to transfer budgeted amounts between departments within any fund; however, any revisions that alter the total expenditures of any fund greater than $20,000 for non-budgeted purchases and $30,000 for budgeted purposes must be approved by the Board of Alderman. This constitutes the City's legal level of budgetary control.

(5) Appropriations lapse at year-end, but may be reappropriated in the following fiscal year.

Net Position - Government-Wide Statements: Net Position is displayed in three components:

(1) Net investment in capital assets component of net position: Consists of capital assets including restricted capital assets, net of accumulated depreciation and reduced by the outstanding balances of any bonds, mortgages, notes, or other borrowings that are attributable to the acquisition, construction, or improvements of those assets.

(2) Restricted component of net position: Consists of restricted assets, reduced by liabilities and deferred inflows of resources related to those assets, with constraints placed on the use either by (a) external groups such as creditors, grantors, contributors, or laws and regulations of other governments; or (b) law through constitutional provisions or enabling legislation.

(3) Unrestricted component of net position: Consists of the net amount of the assets, deferred outflows of resources, liabilities, and deferred inflows of resources that are not included in the determination of "net investment in capital assets" or the "restricted" component of net position.

It is the City's policy to first use restricted net position prior to the use of unrestricted net position when an expense is incurred for purposes for which both restricted and unrestricted net position are available.

1. SUMMARY OF SIGNIFICANT ACCOUNTING POLICIES (Continued):

Fund Equity: In the fund financial statements, governmental funds report aggregate amounts for five classifications of fund balances based on the constraints imposed on the use of these resources. The nonspendable fund balance classification includes amounts that cannot be spent because they are either (a) not in spendable form – prepaid items or inventories; or (b) legally or contractually required to be maintained intact.

The spendable portion of the fund balance comprises the remaining four classifications: restricted, committed, assigned, and unassigned.

Restricted fund balance - This classification reflects the constraints imposed on resources either (a) externally by creditors, grantors, contributors, or laws or regulations of other governments; or (b) imposed by law through constitutional provisions or enabling legislation.

Committed fund balance - These amounts can only be used for specific purposes pursuant to constraints imposed by formal resolutions or ordinances of the Board of Alderman-the government's highest level of decision making authority. Those committed amounts cannot be used for any other purpose unless the Board of Alderman removes the specified use by taking the same type of action imposing the commitment. This classification also includes contractual obligations to the extent that existing resources in the fund have been specifically committed for use in satisfying those contractual requirements.

Assigned fund balance - This classification reflects the amounts constrained by the City's "intent" to be used for specific purposes, but are neither restricted nor committed. The Board of Alderman and the City Administrator have the authority to assign amounts to be used for specific purposes. Assigned fund balance include all remaining amounts (except negative balances) that are reported in the governmental funds, other than the General Fund, that are not classified as nonspendable and are neither restricted nor committed.

Unassigned fund balance - This fund balance is the residual classification for the General Fund. It is also used to report negative fund balances in other governmental funds.

When both restricted and unrestricted resources are available for use, it is the City's policy to use externally restricted resources first, then unrestricted resources—committed, assigned, and unassigned—in order as needed.

The City has a stabilization policy established by ordinance of 17% of last year's audited expenditures as an emergency reserve. Park, Transportation Sales Tax, Capital Sales Tax, and Public Safety Sales Tax Funds have a 5% projected revenue reserve. These reserves may only be appropriated by Board action.

Interfund Receivables and Payables: Transactions between funds that are representative of cash overdrafts from pooled cash and investing are reported as interfund receivables or payables.

1. SUMMARY OF SIGNIFICANT ACCOUNTING POLICIES (Continued):

Pooled Cash, Investments, and Restricted Assets: State statutes authorize the City to invest in banking institutions and obligations of municipalities, repurchase agreements, U.S. government agency obligations, and obligations of the U.S. Treasury. Cash resources of the individual governmental fund types are combined to form a pool of cash and investments. At October 31, 2024, the City's cash was deposited in demand accounts and money markets. Investments with maturities of less than one year are stated at cost, which approximates fair value. All investments are stated at cost, which approximates fair value. Interest income on pooled cash and investments is allocated based upon each fund's respective average cash balance.

Certain proceeds of federal grants are classified as restricted assets on the balance sheet because their use is limited by applicable grant agreements. Assets are also restricted for debt service reserve requirements.

Statement of Cash Flows: A statement of cash flows has been presented in accordance with GASB Statement 9 for the Proprietary Fund. For purposes of the statement of cash flows, all highly liquid investments (including restricted assets) with a maturity of three months or less when purchased are considered to be cash equivalents.

Interfund Activity: During the course of normal operations, the City has transactions between funds, including expenditures and transfers of resources to provide services and construct assets. Legally authorized transfers are treated as transfers and are included in the results of operations of both Governmental and Proprietary Funds.

Inventory: Inventory, which consists principally of maintenance supplies and gasoline, is valued at cost using the first-in/first-out (FIFO) method. The costs of governmental fund inventories are recorded as expenditures when purchased.

Compensated Absences: Accumulated vacation and sick leave, that is expected to be liquidated with expendable available financial resources, is reported as an expenditure and a fund liability of the governmental fund that will pay it. Accumulated vacation and sick leave of proprietary funds is recorded as an expense and liability of those funds as the benefits accrue to employees. A liability for these amounts is reported in governmental funds only if they have matured, for example, as a result of employee resignations or retirements.

Unearned Revenues: Governmental funds report deferred inflows when resources are received by the City before it has a legal claim to them. In subsequent periods, when both revenue recognition criteria are met, or when government has a legal claim to the resources, revenue is recognized. Proprietary funds report unearned revenues when resources are received by the City before services are provided. In subsequent periods after services have been provided revenue is recognized.

1. SUMMARY OF SIGNIFICANT ACCOUNTING POLICIES (Continued):

Capital Assets: Capital assets, which include land, buildings and improvements, equipment, and infrastructure assets (e.g., roads and bridges), are reported in the applicable government or business-type activities columns in the government-wide statements. Capital assets are defined as assets with a cost of $5,000 to $100,000 depending on asset class and expected useful lives in excess of one year. Capital assets are recorded at historical cost if purchased or constructed, or at estimated historical cost if actual historical cost is not available. Donated capital assets are recorded at estimated acquisition value at the date of donation. The costs of normal maintenance and repairs that do not add to the value of the asset or materially extend the asset's life are not capitalized.

All reported capital assets except land and CIP are depreciated. Improvements are depreciated over the remaining useful lives of the related capital assets. Depreciation is computed using the straight-line method over the following estimated lives: Buildings and improvements 25 - 40 years, office equipment and furniture 7 - 10 years, computer equipment 3 - 5 years, infrastructure 20 - 75 years, vehicles and equipment 5 - 15 years.

Deferred Outflows/Inflows of Resources: In addition to assets, the statement of net position will sometimes report a separate element for deferred outflows of resources. This separate financial statement element represents a consumption of net asset that applies to a future period(s) and will not be recognized as an outflow of resources, or expenses/expenditures, until then. The City reports deferred charge on refunding, pension/other post-employment benefit contributions made after the measurement date, pension changes in assumptions, pension net differences between projected and actual investment earnings and pension differences between expected and actual experience as deferred outflows of resources.

In addition to liabilities, the statement of net position will sometimes report a separate element for deferred inflows of resources. This separate financial statement element represents an acquisition of net assets that applies to a future period(s) and will not be recognized as an inflow of resources, or revenues, until that time. The City reports ARPA grants, wellness, leases, pension/OPEB differences between expected and actual experience, the net difference between projected and actual earnings on pension/OPEB investments, and changes of assumptions.

Other Post-Employment Benefits (OPEB): The fiduciary net position of the plan has been determined using the flow of economic resources measurement focus and full accrual basis of accounting. This includes the purpose of measuring the net OPEB liability, deferred outflows of resources and deferred inflows of resources related to the OPEB, and OPEB expense, information about assets, liabilities and additions to/deductions from the City's fiduciary net position. Benefit payments are recognized when due and payable in accordance with the benefit terms. There are no investments as this is a "pay as you go" plan.

Long-Term Obligations: Long-term debt is recognized as a liability of a governmental fund when due. For other long-term obligations, only that portion expected to be financed from expendable available financial resources is reported as a fund liability of a governmental fund. Long-term liabilities expected to be financed from proprietary fund operations are accounted for in those funds.

1. SUMMARY OF SIGNIFICANT ACCOUNTING POLICIES (Continued):

Encumbrances: Encumbrance accounting, under which purchase orders, contracts, and other commitments for the expenditure of monies are recorded in order to reserve that portion of the applicable appropriation, is employed as an extension of the formal budgetary control. Encumbrances outstanding at year-end, if any, are reported as reservations of fund balance for subsequent year expenditures. When expenditures are incurred in subsequent years relating to amounts previously encumbered, such amounts are, if material, reappropriated in the year expended.

Use of Estimates: The preparation of financial statements in conformity with generally accepted accounting principles requires management to make estimates and assumptions that affect the reported amounts of assets and liabilities and disclosure of contingent assets and liabilities at the date of the financial statements and the reported amounts of revenues and expenses during the reporting period. Actual results could differ from those estimates.

Pensions: For purposes of measuring the net pension liability, deferred outflows of resources and deferred inflows of resources related to pensions, and pension expense, information about the fiduciary net position of the Missouri Local Government Employees Retirement System (LAGERS) and additions to/deductions from LAGERS fiduciary net position have been determined on the same basis as they are reported by LAGERS. For this purpose, benefit payments (including refunds of employee contributions) are recognized when due and payable in accordance with the benefit terms. Investments are reported at fair value.

Leases: The City is a lessor for 2 lease agreements. A lease receivable and a deferred inflow of resources is recognized at the commencement of the lease term. The lease receivable is measured at the present value of the lease payments expected to be received during the lease term. The deferred inflows of resources should be measured at the value of the lease receivable plus any payments received at or before the commencement of the lease term that relates to future periods.

The City uses the estimated incremental borrowing rate to calculate the present value of lease payments when the rate implicit in the lease is not known. The City includes lease extension and termination options in the lease term, if after considering relevant economic factors, it is reasonably certain the City or lessee will exercise the option. The City has elected to combine lease and non-lease components for all lease contracts and also has not recognized RTU assets and lease liabilities for lease terms for 12 months or less.

2. DEPOSITS AND INVESTMENTS:

At October 31, 2024, the carrying amount of the City's cash on hand and demand deposits in financial institutions was $5,407 and $15,517,097, respectively. The bank balances of demand deposits were fully covered with a combination of FDIC insurance and pledged collateral held in the name of the City. All deposits were held by a qualified depository.

At October 31, 2024, the City's cash and investments consisted of the following:

	Primary government	Fiduciary funds	Total
Investments:			
Short-term investments held in trust	$ 3,701,673	$ -	$ 3,701,673
MOSIP	12,225,276	-	12,225,276
Pension trust investments	-	10,151,416	10,151,416
	15,926,949	10,151,416	26,078,365
Certificates of deposit	5,000,000	-	5,000,000
Cash on hand	5,405		5,405
Deposits	10,016,675	204,594	10,221,269
	15,022,080	204,594	15,226,674
Total	$ 30,949,029	$ 10,356,010	$ 41,305,039

Deposits and investments of the City are reflected in the government-wide financial statements as follows:

	Government-Wide Statement of Net Position	Fiduciary Funds Statement of Net Position	Total
Pooled cash and cash equivalents	$ 22,566,760	$ 72,596	$ 22,639,356
Restricted cash and investments	8,382,269	10,283,414	18,665,683
	$ 30,949,029	$ 10,356,010	$ 41,305,039

2. DEPOSITS AND INVESTMENTS (Continued):

At October 31, 2024, the City had the following investments and maturities:

	Level 1	Maturity
Investments by fair value level:		
US Treasuries	$ 1,111,510	9/15/2025-2/15/2034
Federal Agency Issues:		
Federal National Mortgage Assoc	2,544	8/1/2035 - 4/1/2036
Federal Home Loan Mortgage Corp	1,478	2/1/2037
PC Gold Comb Gold Pool	6,560	1/1/2048
Mass Mutual DET Corporate Trust GIC	300,237	1/1/2028
Amgen Sr GLBL NT	75,778	3/2/2033
MOSIP CD/Term	6,950,000	3/17/2025
Corporate bonds, stocks and notes	6,905,956	
Total investments by fair value level	15,354,063	
Investments measured by the net asset value:		
Bank Midwest Money Market	1,423,518	
MOSIP Liquid Series	5,275,276	
Fidelity Treasury Fund Class III	1,781,399	
Morgan Stanley Institutional Liquidity Fund	196,519	
Lord Abbett Short Duration Income Instl	184,256	
Fidelity Investment ST Treas Bond	190,568	
Northern Funds Inst. Government	306,654	
DFA Funds US Small Cap Fund	468,031	
T.Rowe Price Mutual Funds Mid Cap Growth	216,687	
MFS International Value R6	76,596	
DFA Funds Emerging Mkts Core Equity	419,968	
Vanguard Group REIT Index Fund	184,830	
Total investments measured at net asset value	10,724,302	
Total investments	$ 26,078,365	

2. DEPOSITS AND INVESTMENTS (Continued):

Credit Risk:

Credit risk is the risk that an issuer or other counterparty to an investment will not fulfill its obligations. Credit risk is measured using credit quality ratings of investments in debt securities as described by nationally recognized rating agencies such as Standard & Poor's and Moody's. Concentration of credit risk is the risk of loss attributed to the magnitude of investment in a single issuer.

Missouri State Statutes authorize the City, with certain restrictions, to deposit funds in open accounts, time deposits, and certificates of deposit. Statutes also require that collateral pledged have a fair market value equal to 100% of the funds on deposit, less insured amounts. Collateral securities must be held by the City or a disinterested third party and must be of the kind prescribed by statutes and approved by the State. The City may purchase any investments allowed by the State Treasurer. These include (a) obligations of the United States government or any agency or instrumentality thereof maturing and becoming payable not more than three years from the date of purchase, or (b) repurchase agreements maturing and becoming payable within 90 days secured by U.S. Treasury obligations or obligations of U.S. government agencies or instrumentalities of any maturity, as provided by law.

The City's general credit risk policy is to apply the prudent person rule: Investments shall be made with the exercise of that judgment and care, under circumstances then prevailing, which individuals of prudence, discretion, and intelligence exercise in the management of their own affairs, not for speculation, but for investment, considering the probable safety of their capital, as well as the probable income to be derived.

Interest Rate Risk:

Interest rate risk is the risk that changes in interest rates will adversely affect the fair value of an investment. The City does not have a formal policy for interest rate risk. However, the City does manage its exposure to fair value loss arising from interest rate changes on internally invested funds by reviewing the portfolio on an ongoing basis for changes in effective yield amounts. The City has elected to use the segmented time distribution method of disclosure for its interest rate risk.

Custodial Credit Risk:

The custodial credit risk for deposits is the risk that, in the event of the failure of a depository financial institution, the City will not be able to recover deposits or will not be able to recover collateral securities that are in the possession of an outside party. The custodial credit risk of investments is the risk that, in the event of the failure of the counterparty to a transaction, the City will not be able to recover the value of investment or collateral securities that are in the possession of an outside party. The City's policy is to collateralize demand deposits with securities held by the financial institution's agent and in the City's name.

3. RECEIVABLES:

As a result of providing sanitation services to its citizens, the City has extended credit to them. Accounts receivable are presented net of allowance for doubtful accounts of $160,074 for the Sewer Utility Fund.

The City has entered into a development agreement with Gregory Square Partners, LLC and the Ditzler Community Improvement District (CID). Under the agreement, the City provided funding totaling $850,000 to be used to finance a portion of the development cost of the project and development of certain real property located at the intersection of Gregory Boulevard and Ditzler Avenue. Under the terms of the agreement, the City is scheduled to be reimbursed for the $850,000 in funding over a period not to exceed 20 years, including interest at 6.5%, from CID sales taxes generated from taxable sales within the CID district. The outstanding balance under the agreement is $196,402 as of October 31, 2024.

4. CAPITAL ASSETS:

Capital asset activity for the year ended October 31, 2024, consisted of the following:

	Balance 11/1/2023	Additions	Retirements	Balance 10/31/2024
Governmental activities:				
Capital assets not being depreciated:				
Land	$ 1,502,090	$ -	$ -	$ 1,502,090
Construction in progress	1,791,021	3,264,263	1,611,619	3,443,665
Total capital assets not being depreciated	3,293,111	3,264,263	1,611,619	4,945,755
Capital assets being depreciated:				
Buildings and improvements	8,336,307	-	629,702	7,706,605
Infrastructure	71,789,921	1,619,759	-	73,409,680
Vehicles and equipment	10,936,833	723,110	1,467,733	10,192,210
Total capital assets being depreciated	91,063,061	2,342,869	2,097,435	91,308,495
Less: Accumulated depreciation				
Buildings and improvements	5,142,137	230,572	594,670	4,778,039
Infrastructure	52,966,811	1,546,356	-	54,513,167
Vehicles and equipment	8,646,684	471,745	1,467,733	7,650,696
Total accumulated depreciation	66,755,632	2,248,673	2,062,403	66,941,902
Total capital assets being depreciated, net	24,307,429	94,196	35,032	24,366,593
Total governmental activities capital assets, net	$ 27,600,540	$ 3,358,459	$1,646,651	$ 29,312,348

4. CAPITAL ASSETS (Continued):

Capital asset activity for the year ended October 31, 2024, consisted of the following (Continued):

	Balance 11/1/2023	Additions	Retirements	Balance 10/31/2024
Business-type activities:				
Capital assets not being depreciated:				
Land	$ 433,393	$ -	$ -	$ 433,393
Construction in progress	494,093	819,853	470,421	843,525
Total capital assets not being depreciated	927,486	819,853	470,421	1,276,918
Capital assets being depreciated:				
Vehicles and equipment	783,173	29,987	-	813,160
Distribution system	29,400,576	470,421	-	29,870,997
Total capital assets being depreciated	30,183,749	500,408	-	30,684,157
Less: Accumulated depreciation:				
Vehicles and equipment	684,649	10,723	-	695,372
Distribution system	14,462,340	655,475	-	15,117,815
Total accumulated depreciation	15,146,989	666,198	-	15,813,187
Total capital assets being depreciated, net	15,036,760	(165,790)	-	14,870,970
Total business-type activities capital assets, net	$ 15,964,246	$ 654,063	$ 470,421	$ 16,147,888

Depreciation expense was charged to the function/programs of the primary government as follows:

Governmental activities:	
General government	$ 92,461
Parks	122,516
Public safety	176,175
Public works	1,857,521
Total depreciation expense, governmental	2,248,673
Business-type activities,	
Sewer Utility	$ 666,196

Land held for Redevelopment: The City has acquired title to certain land that is not used in the City's continuing operations but is instead held by the City for future redevelopment projects. At October 31, 2024, the carrying value of the land was $1,034,432.

5. DEFINED PENSION PLAN:

Plan description: The City's defined benefit pension plan provides certain retirement, disability, and death benefits to plan members and beneficiaries. The City participates in the Missouri Local Government Employees Retirement System (LAGERS). LAGERS is an agent multiple-employer, statewide public employee pension plan established in 1967 and administered in accordance with RSMo. 70.600-70.755. As such, it is LAGERS responsibility to administer the law in accordance with the expressed intent of the General Assembly. The plan is qualified under the Internal Revenue Code Section 401(a) and is tax exempt. The responsibility for the operations and administration of LAGERS is vested in the LAGERS Board of Trustees consisting of seven persons. LAGERS issues a publicly available financial report that includes financial statements and required supplementary information. This report may be obtained by accessing the LAGERS website at www.molagers.org.

Benefits provided: LAGERS provides retirement, death, and disability benefits. Benefit provisions are adopted by the governing body of the employer, within the options available in the state statutes governing LAGERS. All benefits vest after 5 years of credited service. Employees who retire on or after age 60 (55 for police and fire) with 5 or more years of service are entitled to an allowance for life based upon the benefit program information provided below. Employees may retire with an early retirement benefit with a minimum of 5 years of credited service and after attaining age 55 (50 for police and fire) and receive a reduced allowance.

	2024 Valuation
Benefit Multiplier:	1.75%
Final Average Salary:	5 years
Member Contributions:	4%

Benefit terms provide for annual post retirement adjustments to each member's retirement allowance subsequent to the member's retirement date. The annual adjustment is based on the increase in the Consumer Price Index and is limited to 4% per year.

Employees covered by benefit terms: At June 30, 2024, the following employees were covered by the benefit terms:

Inactive employees or beneficiaries currently receiving benefits	68
Inactive employees entitled to but not yet receiving benefits	125
Active employees	98
	291

5. DEFINED PENSION PLAN (Continued):

Contributions: The employer is required to contribute amounts at least equal to the actuarially determined rate, as established by LAGERS. The actuarially determined rate is the estimated amount necessary to finance the cost of benefits earned by employees during the year, with an additional amount to finance an unfunded accrued liability. Full-time employees of the employer contribute 4% to the pension plan. Employer contribution rates are 14.2% General and 9.3% Police of annual covered payroll.

Net Pension Liability: The employer's net pension liability was measured as of June 30, 2024, and the total pension liability used to calculate the net pension liability was determined by an actuarial valuation as of February 29, 2024.

Actuarial Assumptions: The total pension liability in the February 29, 2024, actuarial valuation was determined using the following actuarial assumptions, applied to all periods included in the measurement:

Inflation	2.75% wage inflation; 2.25% price inflation
Salary Increase	2.75% to 6.75% including wage inflation
Investment rate of return	7.0%, net of investment expenses

Mortality rates were based on the PubG-2010, PubNS-2010, and PubS-2010 mortality table for males and females, adjusted for mortality improvement back to the observation period base year of 2010.

The actuarial assumptions used in the February 29, 2024 valuation were based on the results of an actuarial experience study for the period March 1, 2015 through February 29, 2020.

The long-term expected rate of return on pension plan investments was determined using a model method in which the best-estimate ranges of expected future real rates of return (expected returns, net of investment expenses and inflation) are developed for each major asset class. These ranges are combined to produce the long-term expected rate of return by weighting the expected future real rates of return by the target asset allocation percentage and by adding expected inflation. The target allocation and best estimates of arithmetic real rates of return for each major asset class are summarized in the following table:

Asset Class	Target Allocation	Long-Term Expected Real Rate of Return
Equity	39.00%	4.35%
Fixed Income	28.00%	1.43%
Real Assets	33.00%	2.67%

5. DEFINED PENSION PLAN (Continued):

Discount rate: The discount rate used to measure the total pension liability is 7.00%. The projection of cash flows used to determine the discount rate assumes that employer and employee contributions will be made at the rates agreed upon for employees and the actuarially determined rates for employers. Based on these assumptions, the pension plan's fiduciary net position was projected to be available to pay all projected future benefit payments of current active and inactive employees. Therefore, the long-term expected rate of return on pension plan investments was applied to all periods of projected benefit payment to determine the total pension liability.

Changes in the Net Pension Liability

	Increase (Decrease)		
	Total Pension Liability (a)	Plan Fiduciary Net Position (b)	Net Pension Liability (Asset) (a) - (b)
Balances at 6/30/2023	$ 24,827,213	$ 23,331,016	$ 1,496,197
Changes for the year:			
Service Cost	665,918	-	665,918
Interest	1,728,760	-	1,728,760
Difference between expected and actual experience	-	-	-
Change in assumptions	1,276,884	-	1,276,884
Contributions - employer	-	923,070	(923,070)
Contributions - employee	-	290,347	(290,347)
Net investment income	-	1,236,043	(1,236,043)
Benefit payments, including refunds	(931,708)	(931,708)	-
Administrative expense	-	(31,706)	31,706
Other changes	-	(78,294)	78,294
Net changes	2,739,854	1,407,752	1,332,102
Balances at 6/30/2024	$ 27,567,067	$ 24,738,768	$ 2,828,299

Sensitivity of the net pension liability to changes in the discount rate: The following presents the Net Pension Liability of the employer, calculated using the discount rate of 7.00%, as well as what the employer's Net Pension Liability would be using a discount rate that is 1 percentage point lower 6.00% or one percentage point higher 8.00% than the current rate.

	1% Decrease 6.00%	Current Single Discount Rate Assumption 7.00%	1% Increase 8.00%
Total Pension Liability (TPL)	$ 31,697,313	$ 27,567,067	$ 24,175,146
Plan Fiduciary Net Position	24,738,768	24,738,768	24,738,768
Net Position Liability/(Asset) (NPL)	$ 6,958,545	$ 2,828,299	$ (563,622)

5. DEFINED PENSION PLAN (Continued):

Pension Expense and Deferred Outflows of Resources and Deferred Inflows of Resources Related to Pensions

For the year ended October 31, 2024 the employer recognized pension expense of $1,062,742. The employer reported deferred outflows and inflows of resources related to pensions from the following sources:

	Deferred Outflows of Resources		Deferred Inflows of Resources		Net Deferred Resources
	Governmental	Business-type	Governmental	Business-type	
Differences in experience	$ 1,142,638	$ 96,549	$ (243,873)	$ -	$ 995,314
Differences in assumptions	20,461	-	(27)	-	20,434
Excess (deficit) investment returns	549,204	70,927	-	-	620,131
Contributions subsequent to the measurement date*	273,578	45,649	-		319,227
Total	$ 1,985,881	$ 213,125	$ (243,900)	$ -	$ 1,955,106

*The amount reported as deferred outflows of resources resulting from contributions subsequent to the measurement date will be recognized as a reduction in the Net Pension Liability for the year ending October 31, 2025.

Amounts reported as deferred outflows and inflows of resources related to pensions will be recognized in pension expense as follows:

Year Ending	Net Deferred Outflows of Resources
2024	$ 312,495
2025	910,320
2026	289,324
2027	123,740
2028	-
Thereafter	-
	$ 1,635,879

Payable to the Pension Plan

At October 31, 2024, the City reported a payable of $96,914 for the outstanding amount of contributions due to the pension plan.

6. POLICE OFFICERS' RETIREMENT PLAN (FROZEN):

General information about the plan

Plan description: Commissioned officers of the Police Department hired before December 31, 2013 are members of the Police Officers' Retirement Fund Pension Plan. The plan is a single-employer plan administered by the City. Benefit Trust Company Inc. acts as the investment advisor and custodian for the plan. The financial statements of this plan are included in the Pension Trust Fund in the accompanying basic financial statements of the City.

The plan was amended and restated effective December 31, 2013. Under the amendment and restated plan, benefits were frozen as of December 31, 2013, no new participants are allowed to enter the plan, and all active participants as of December 31, 2013 are 100% vested. The plan does not issue a separate financial statement.

Benefits provided: The Plan provides retirement, disability and death benefits to plan members and beneficiaries. Officers who retire at age 55 with 20 or more years of service are entitled to an allowance for life based on the benefit program information provided below.

	2023 Valuation
Benefit Multiplier:	2.5% up to 20 years, plus 1% times the next 10 years
Final Average Salary:	5 highest calendar years of compensation out of last 10 years
Member Contributions:	0%

Employees covered by benefit terms: At January 1, 2024, the following employees were covered by the benefit terms:

Inactive employees or beneficiaries currently receiving benefits	45
Inactive employees entitled to but not yet receiving benefits	24
Active employees	12
	81

Contributions: The employer is required to contribute amounts at least equal to the actuarially determined rate, as established by LAGERS. The actuarially determined rate is the estimated amount necessary to finance the cost of benefits earned by employees during the year, with an additional amount to finance an unfunded accrued liability. Full-time employees of the employer do not contribute to the pension plan.

6. POLICE OFFICERS' RETIREMENT PLAN (FROZEN) (Continued):

Net Pension Liability: The employer's net pension liability was measured as of January 1, 2023, and the total pension liability used to calculate the net pension liability was determined by an actuarial valuation as of January 1, 2024.

Actuarial Assumptions: The total pension liability in the January 1, 2024, actuarial valuation was determined using the following actuarial assumptions, applied to all periods included in the measurement:

Salary Increase	4.0% (plan is frozen, scale is for death benefits only)
Investment rate of return	7.0% (net of investment fees, 2.5% inflation component)

Mortality rates were based on the Public Safety 2010 tables for employees and annuitants projected with generational improvements using scale MP-2024.

The actuarial assumptions used in the January 1, 2024 valuation were based on past experience of the plan.

The long-term expected rate of return on pension plan investments was determined using a model method in which the best-estimate ranges of expected future real rates of return (expected returns, net of investment expenses and inflation) are developed for each major asset class. These ranges are combined to produce the long-term expected rate of return by weighting the expected future real rates of return by the target asset allocation percentage and by adding expected inflation. The target allocation and best estimates of arithmetic real rates of return for each major asset class are summarized in the following table:

Asset Class	Target Allocation	Long-Term Expected Real Rate of Return
Equity	65.00%	8.50%
Fixed Income	35.00%	4.25%

Discount rate: The discount rate used to measure the total pension liability is 7.0%. The projection of cash flows used to determine the discount rate assumes that employer and employee contributions will be made at the rates agreed upon for employees and the actuarially determined rates for employers. Based on these assumptions, the pension plan's fiduciary net position was projected to be available to pay all projected future benefit payments of current active and inactive employees. Therefore, the long-term expected rate of return on pension plan investments was applied to all periods of projected benefit payment to determine the total pension liability.

6. POLICE OFFICERS' RETIREMENT PLAN (FROZEN) (Continued):

Changes in the Net Pension Liability

	Increase (Decrease)		
	Total Pension Liability (a)	Plan Fiduciary Net Position (b)	Net Pension Liability (a) - (b)
Balances at 12/31/2022	$ 17,883,857	$ 9,308,244	$ 8,575,613
Changes for the year:			
Service Cost	25,206	-	25,206
Interest	1,201,109	-	1,201,109
Difference between expected and actual experience	159,630	-	159,630
Change in assumptions	(130,686)	-	(130,686)
Contributions - employer	-	697,222	(697,222)
Contributions - employee	-	-	-
Net investment income	-	1,455,035	(1,455,035)
Benefit payments, including refunds	(1,470,833)	(1,470,833)	-
Administrative expense	-	(23,530)	23,530
Other changes	-	-	-
Net changes	(215,574)	657,894	(873,468)
Balances at 12/31/2023	$ 17,668,283	$ 9,966,138	$ 7,702,145

Sensitivity of the net pension liability to changes in the discount rate: The following presents the Net Pension Liability of the employer, calculated using the discount rate of 7.0%, as well as what the employer's Net Pension Liability would be using a discount rate that is 1 percentage point lower 6.0% or one percentage point higher 8.0% than the current rate.

	Current Single Discount		
	1% Decrease 6.0%	Rate Assumption 7.0%	1% Increase 8.0%
Total Pension Liability (TPL)	$ 19,344,478	$ 17,668,283	$ 16,242,539
Plan Fiduciary Net Position	9,966,138	9,966,138	9,966,138
Net Position Liability/(Asset) (NPL)	$ 9,378,340	$ 7,702,145	$ 6,276,401

6. POLICE OFFICERS' RETIREMENT PLAN (FROZEN) (Continued):

Pension Expense and Deferred Outflows of Resources and Deferred Inflows of Resources Related to Pensions

For the year ended October 31, 2024 the employer recognized pension expense of $508,696. The employer reported deferred outflows and inflows of resources related to pensions from the following sources:

	Deferred Outflows of Resources	Deferred Inflows of Resources
Differences in experience	$ 10,443	$ -
Differences in assumptions	-	8,550
Excess (deficit) investment returns	423,533	-
Total	$ 433,976	$ 8,550

Amounts reported as deferred outflows and inflows of resources related to pensions will be recognized in pension expense as follows:

Year Ending	Net Deferred Inflows of Resources
2024	$ 93,985
2025	166,297
2026	331,460
2027	(166,316)
2028	-
Thereafter	-
	$ 425,426

Payable to the Pension Plan

At October 31, 2024, the City reported a payable of $0 for the outstanding amount of contributions due to the pension plan.

7. DEFERRED COMPENSATION PLAN:

Beginning on January 1, 2013, the City offers all employees not governed by a collective bargaining agreement a deferred compensation plan created in accordance with the Internal Revenue Code Section 401(a). Under the plan, the City matches 50% of employee contributions, up to 2% of the employee's annual salary deferrals to the plan. The payroll for the employees covered by the plan was $4,367,497 during the year. Total gross payroll was $7,657,904. For the year ended October 31, 2024, the City contributed $83,333 to the plan.

8. LONG-TERM DEBT:

Changes in long-term debt of the City for the year ended October 31, 2024, consisted of the following:

Governmental Activities

	Balance November 1, 2023	Additions	Payments/ Adjustments	Balance October 31, 2024	Due in One year
Revenue bonds	$ 20,615,000	$ -	$ 2,295,000	$ 18,320,000	$ 2,370,000
SBITA agreements	296,961	-	45,794	251,167	47,214
	20,911,961	-	2,340,794	18,571,167	2,417,214
Other liabilities:					
OPEB*	300,770	-	73,525	227,245	-
Net pension*	9,942,734	313,412	-	10,256,146	-
Compensated absences	577,710	1,067,652	432,600	1,212,762	627,600
	10,821,214	1,381,064	506,125	11,696,153	627,600
Total	$ 31,733,175	$ 1,381,064	$ 2,846,919	$ 30,267,320	$ 3,044,814

Business-Type Activities

	Balance November 1, 2023	Additions	Payments/ Adjustments	Balance October 31, 2024	Due in One year
Revenue Bonds	$ 4,336,468	$ -	$ 1,071,393	$ 3,265,075	$ 1,107,716
Bond (discount) / premium	41,714	-	14,616	27,098	14,616
	4,378,182	-	1,086,009	3,292,173	1,122,332
Other liabilities:					
OPEB	30,053	-	6,234	23,819	-
Net pension	129,076	145,222	-	274,298	-
Compensated absences	38,868	57,448	38,868	57,448	57,488
	197,997	202,670	45,102	355,565	57,488
Total	$ 4,576,179	$ 202,670	$ 1,131,111	$ 3,647,738	$ 1,179,820

*Other liabilities are primarily liquidated by the General Fund.

8. LONG-TERM DEBT (Continued):

The compensated absences liability attributable to governmental activities will be liquidated primarily by the General Fund. The liability for compensated absences has been calculated using the vesting method, which leaves amounts for both employees who currently are eligible to receive termination payments and other employees who are expected to become eligible in the future to receive such payments upon termination are included. A liability for these amounts is reported in governmental funds only if they have matured, for example, as a result of employee resignations and retirements.

Total City debt at October 31, 2024, consisted of the following:

Governmental funds:	
$28,800,000, Series 2019 TIF refunding revenue bonds, issued for the refunding of Series 2007 TIF revenue bonds, due in annual installments of $1,930,000 to $2,875,000, through February 1, 2031, interest at 3.23%	$ 18,320,000
SBITA agreements	251,167
Total governmental funds	$ 18,571,167
Proprietary fund:	
$7,590,000, Series 2006A sewerage system revenue bonds, due in annual installments of $35,000 to $580,000, through July 1, 2026, interest at 4.0% to 5.25%	$ 1,135,000
$5,495,000, Series 2007A sewerage system revenue bonds, due in annual installments of $180,000 to $405,000, through January 1, 2028, interest at 4.0% to 4.75%	1,510,000
$1,226,857, Series 2021 sewerage system refunding revenue bonds, issued for the refunding of Series 2013 sewerage system revenue bonds, due in annual installments of $199,451 to $208,769, through July 1, 2027, interest at 1.62%	620,075
Bond premium	27,098
Total proprietary fund	$ 3,292,173

8. LONG-TERM DEBT (Continued):

Aggregate annual principal and interest payments applicable to long-term debt are:

Years ending October 31,	Principal	Interest	Governmental Revenue Bonds
2025	$ 2,370,000	$ 553,461	$ 2,923,461
2026	2,450,000	475,618	2,925,618
2027	2,530,000	395,191	2,925,191
2028	2,610,000	312,180	2,922,180
2029	2,700,000	226,423	2,926,423
2030-2031	5,660,000	184,272	5,844,272
	$ 18,320,000	$ 2,147,145	$ 20,467,145

Years ending October 31,	Principal	Interest	Business -Type Revenue Bonds
2025	$ 1,107,716	$ 122,957	$ 1,230,673
2026	1,158,590	76,211	1,234,801
2027	593,769	29,523	623,292
2028	405,000	8,859	413,859
	$ 3,265,075	$ 237,550	$ 3,502,625

Years ending October 31,	Principal	Interest	Governmental Subscription Liability
2025	$ 47,214	$ 7,786	$ 55,000
2026	48,678	6,322	55,000
2027	50,186	4,814	55,000
2028	51,742	3,258	55,000
2029	53,347	1,654	55,001
	$ 251,167	$ 23,834	$ 275,001

8. LONG-TERM DEBT (Continued):

Bond Reserve Accounts:

Rates and fees established and charged were sufficient to satisfy bond covenant responsibilities for the sewer fund for the year ended October 31, 2024.

The Missouri State Constitution permits a city, by a vote of either two-thirds or four-sevenths of the voting electorate, depending on the date of the election, to incur general obligation indebtedness for "city purposes" not to exceed 10% of the assessed value of taxable tangible property and to incur additional general obligation indebtedness not to exceed, in the aggregate, an additional 10% of the assessed value of taxable tangible property, for the purpose of acquiring rights-of-way, construction, extending and improving streets and avenues, and/or sanitary or storm sewer systems, and purchasing or constructing waterworks, electric, or other light plants, provided the total general obligation indebtedness does not exceed 20% of the assessed valuation of taxable property.

9. LEASES:

The City has entered into two agreements to lease tower space. The lease agreements expire in 2041 and 2046, assuming that all renewal options are exercised by the lessees. During 2024, the City received $32,363 in lease revenue which represents the total amount of inflows of resources recognized in the reporting period from leases.

The following represents the future minimum lease revenue due for governmental activities under the lease arrangements as of October 31:

Year	Principal	Interest	Total
2025	$ 21,045	$ 20,535	$ 41,580
2026	22,235	19,840	42,075
2027	24,482	19,078	43,560
2028	26,019	18,267	44,286
2029	28,359	17,379	45,738
2030-2034	167,177	71,787	238,964
2035-2039	183,051	41,156	224,207
2040-2044	122,103	18,232	140,335
2045-2046	46,968	1,347	48,315
	$ 641,439	$ 227,621	$ 869,060

10. RESTRICTED CASH:

Restricted cash and investments at October 31, 2024, consisted of the following:

Account	General Fund	Special Revenue Funds	Sewer Utility Fund	Total
Grants	$ 4,680,596	$ -	$ -	$ 4,680,596
Reserve for debt service	-	3,204,917	496,756	3,701,673
	$ 4,680,596	$ 3,204,917	$ 496,756	$ 8,382,269

11. LEGAL MATTERS:

There are a number of claims or lawsuits to which the City is, or may be, a party as a result of certain law enforcement activities, injuries and various other matters and complaints arising in the ordinary course of activities. The City's management and legal counsel believe that the potential claims against the City not covered by insurance, if any, resulting from such matters, would not materially affect the financial position of the City.

12. PLEDGED REVENUES:

The City, other taxing districts and governmental entities have pledged a portion of future incremental property tax and sales tax revenues (TIF revenues) to repay the tax increment and sales tax revenue bonds described above. TIF revenues were projected to produce sufficient funds to meet debt service requirements over the life of the bonds. Should the normal TIF revenues (50% of incremental activity taxes) including those of other taxing districts and governmental entities not be sufficient to meet the required debt service obligations, the City, subject to annual appropriation, further covenants to appropriate the City's remaining 50% portion (effectively 100%) of the economic activity taxes generated by the project and other legally available funds of the City in an amount equal to the principal and interest of the bonds due in the next fiscal year. Incremental taxes are pledged to make payments on these obligations for a period not to exceed 23 years.

For the current year, the City made debt service payments on the tax increment and sales tax revenue bonds totaling $2,923,800. The incremental tax revenues generated by the 350 Highway TIF plan began in October 2009. For the year ended October 31, 2024, the City's incremental tax revenues totaled $1,637,954. The remaining funds necessary to meet the current year debt service requirements were derived from incremental activity tax revenues from other taxing districts and governmental entities, and interest income totaling $1,285,846.

12. PLEDGED REVENUES (Continued):

The City has entered into a developer agreement whereby the developer financed project costs that have been certified by the City as eligible to be reimbursed related to Phase 2 of the 350 Highway TIF Project. These obligations are to be paid from Phase 2 Economic Activity Taxes (EATs) revenues in excess of 125% of the debt service payments of the related tax increment and sales tax revenue bonds. For the current year, debt service on the obligation totaled $282,007 in principal payments. The remaining balance as of October 31, 2023 is $304,787.

13. TAX REVENUES:

Tax revenues, including interest and penalties collected thereon, for the year ended October 31, 2024, are as follows:

Type	General Fund	Special Revenue Funds
Property	$ 1,313,263	$ 655,897
Railroad	37,041	18,500
Franchise	3,720,510	-
City sales	4,118,553	-
Use sales	1,937,842	-
Public safety sales	-	1,952,921
Capital improvement sales	-	1,952,922
Transportation sales	-	1,772,271
	$ 11,127,209	$ 6,352,511

The assessed valuation of the tangible property for the purpose of local taxation as of September 3, 2023, was as follows:

Real estate	$ 438,526,256
Personal property	83,934,384
	$ 522,460,640

The tax levy per $100 of assessed valuation of tangible real and personal property for the calendar year 2024 was as follows:

General Fund	$ 0.2529
Park Fund	0.1263
	$ 0.3792

Property taxes may attach as an enforceable lien on property as of January 1. Taxes are levied no later than November 1 and are due and payable at that time. All unpaid taxes levied by November 1 become delinquent January 1 of the following year.

14. INTERFUND BALANCES:

Interfund receivable and payable balances at October 31, 2024, were as follows:

	Receivable	Payable
General Fund	$ 105,956	$ 130,136
Special Revenue Funds:		
Risk management	-	88,785
Transportation sales tax	-	57,932
TIF	288,827	-
Park	2,021	5,671
Capital sales tax	-	51,157
Public safety sales tax	-	29,755
Storm water	-	14,268
Agency Fund,		
350 Highway TDD	-	21
Sewer Utility	-	19,079
	$ 396,804	$ 396,804

Transfers during the year ended October 31, 2024, were as follows:

	Transfers In	Transfers Out
General Fund	$ 1,367,034	$ 1,285,925
Special Revenue Funds:		
Transportation sales tax		369,260
Public safety sales tax		1,537,143
Risk management	80,000	
TIF	1,664,198	
Park	3,582	35,151
Capital sales tax		283,589
Storm water	449,689	32,491
Sewer Utility	-	20,944
	$ 3,564,503	$ 3,564,503

In general, transfers are used to (1) move revenues from the fund that collects the money to the fund that expends the money, (2) move receipts restricted or earmarked for debt service from the funds collecting the receipts to the debt service fund as debt service payments become due, and (3) use unrestricted revenues collected in a fund to provide operating advances to other funds in accordance with budgetary authorizations.

15. RISK MANAGEMENT:

The City is exposed to various risks of loss related to torts; theft of, damage to, and destruction of assets; errors and omissions; workers' compensation, and natural disasters for which the City carries commercial insurance. There have been no significant reductions in insurance coverage from the prior year and no significant losses in the past three fiscal years.

16. COMMITMENTS AND CONTINGENCIES:

Construction commitments at October 31, 2024 consisted of $4,254,462 spread across several projects and funds.

17. POSTEMPLOYMENT BENEFITS OTHER THAN PENSIONS:

General information about the OPEB plan

Plan Description*:* The City provides for a continuation of medical, pharmacy, dental and vision insurance benefits to eligible early retirees and their spouses. The plan is administered by Midwest Public Risk (MPR) and is an agent multiple-employer plan. No separate financial report is issued for the plan.

Benefits Provided: Retirees and their spouses may obtain Medical coverage until Medicare eligibility by paying required premium rates. Upon retiree death or attainment of age 65, spouses may continue COBRA coverage for up to three years. The required premium rates are based to some degree on combined active and retiree experience so retirees are not charged the full age-based projected cost.

Funding Policy: The City requires the retirees to pay 125% of the premiums charged to active employees. Retirees and spouses have the same benefits as active employees. Effective July 1, 2018, retirees are charged 135% of plan premiums. However, all retiree coverage terminates upon Medicare entitlement or if payment is not received on a timely basis. The City contributed $3,000 to the plan during fiscal year 2024.

At July 1, 2023, the following employees were covered by the benefit terms:

Active employees	105
Retires and covered spouses	2
	107

Net OPEB Liability: The employer's net OPEB liability of $251,064 was measured as of October 31, 2024, and the total OPEB liability used to calculate the net OPEB liability was determined by an actuarial valuation as of July 1, 2023.

17. POSTEMPLOYEMENT BENEFITS OTHER THAN PENSIONS (Continued):

Actuarial Assumptions: The total OPEB liability in the July 1, 2023, actuarial valuation was determined using the following assumptions and other inputs, applied to all periods included in the measurement, unless otherwise specified:

	2023 Valuation
Inflation	2.75%
Salary increases	3.00%
Discount rate	4.19%
Actuarial cost method	Entry Age Normal - Level Percent of Pay
Healthcare cost trend rates	7.5% for 2024 decreasing by .25% per year to an ultimate rate of 4.5% for 2036 and later years.

The discount rate was based on an index for 20-year, tax-exempt general obligation municipal bonds with an average rating of AA/Aa or higher.

Healthy life mortality rates were based on the Society of Actuaries Pub-2010 Public Retirement Plans Headcount-weighted General and Public Safety Mortality Tables using Scale MP-2021 Full Generational Improvement. Disabled life mortality rates were based on the Society of Actuaries Pub-2010 Public Retirement Plans Disabled Retirees Headcount-weighted General and Public Safety Mortality Tables using Scale MP-2021 Full Generational Improvement.

Changes in the Net OPEB Liability:

	OPEB Liability
Balance at 11/1/2023	$ 330,823
Charges of the year:	
Service cost	12,007
Interest	17,101
Changes of benefits terms	-
Differences between expected and actual experiences	(58,111)
Changes in assumptions and inputs	(47,756)
Benefit payments	(3,000)
Net changes	(79,759)
Balance at 10/31/2024	$ 251,064

17. POSTEMPLOYEMENT BENEFITS OTHER THAN PENSIONS (Continued):

Discount Rate Sensitivity Analysis: The following presents the Net OPEB Liability of the City, calculated using a discount rate of 4.19%, as well as what the Net OPEB Liability would be using a discount rate 1% less (3.19%) and 1% greater (5.19%) than the current rate.

	1% Decrease 3.19%	Discount Rate 4.19%	1% Increase 5.19%
Total OPEB Liability	$ 277,042	$ 251,064	$ 228,200

Healthcare Cost Trend Analysis: The following presents the Net OPEB liability of the City, considering a 1% decrease and 1% increase of the current rate due to healthcare cost factors such as medical inflation, utilization of healthcare services, plan design and technology developments.

	1% Decrease	Discount Rate	1% Increase
Total OPEB Liability	$ 221,722	$ 251,064	$ 286,011

OPEB Expense and Deferred Outflows of Resources and Deferred Inflows of Resources Related to OPEB:

For the year ended October 31, 2024, the City reported OPEB expense of $13,243 The City reported deferred outflows and inflows of resources related to OPEB as follows:

	Deferred Outflows of Resources	Deferred Inflows of Resources
Changes in assumptions	$ 55,300	$ 99,033
Differences between expected and actual experience	57,611	143,934
Total	$ 112,911	$ 242,967

Amounts reported as deferred outflows of resources related to OPEB will be recognized in OPEB expenses as follows:

Fiscal Year Ending	Net Deferred Outflows of Resources
2025	$ (15,865)
2026	(15,865)
2027	(15,865)
2028	(15,867)
2029	(14,035)
Thereafter	(52,559)
	$ (130,056)

18. FROZEN PENSION PLAN:

Prior to participating in LAGERS and the Police Officers' Retirement fund, the City offered two defined benefit pension plans for its employees. Upon entering into LAGERS and the Police Officers' Retirement Fund, the City transferred the obligation for all future payments under the plans to an outside insurance company. The City has no future obligations to contribute any additional amounts to these plans, and no amounts were paid during the year ended October 31, 2024. Accordingly, no provisions for the related assets have been made in the accompanying financial statements. Benefits paid from these plans during the year ended October 31, 2024, totaled $29,641.

19. TAX ABATEMENTS:

Tax abatements are granted under the Urban Redevelopment program described under Chapter 353 of the RSMo, Tax Increment Financing program described under Section 99.800 RSMo, the Industrial Development program described under Chapter 100 of RSMo, and the Enhanced Enterprise Zone program described under Sections 135.950 to 135.973 of RSMo. For each of these programs, property taxes are abated by reducing the assessed valuation of the associated properties. For the fiscal year ended October 31, 2024, taxes abated for the City in connection with the Chapter 353, and Tax Increment Financing program were estimated at $5,058, and $25,415, respectively.

20. STEWARDSHIP, COMPLIANCE, AND ACCOUNTABILITY:

For the year ended October 31, 2024, in violation of Missouri state statutes and the City's budgetary process, the City had actual expenditures in excess of budget in the following funds:

Special Revenue Funds,	
TIF Fund	$ 138,600
Capital Improvement Fund	47,717
	$ 186,317

21. CHANGE IN ACCOUNTING PRINCIPLE:

During the year, the City implemented GASB Statement No. 101 *Compensated Absences.* The implementation of the Statement had no impact on the City's beginning of year net position or fund balances. Current year changes in compensated absences due to the implementation of Statement No. 101 are shown in footnote #8.

22. INTERGOVERNMENTAL REVENUE:

Intergovernmental revenue during the year ended October 31, 2024, consisted of the following:

	General Fund	Other Governmental Funds
Federal:		
US Department of Treasury,		
American Rescue Plan Act	$ 42,350	$ 345,702
US Department of Justice,		
Public Safety Grants	674	6,075
Department of Transportation,		
Public Safety Grants	12,792	-
Department of Interior,		
Land and Water Conservation	-	65,852
State,		
Department of Revenue:		
Motor Vehicle Sales Tax	319,069	-
Motor Vehicle Fuel Tax	1,142,150	-
Motor Vehicle Fees	131,954	-
Department of Conservation,		
TRIM	-	19,300
County,		
TDD, CID, Pilot	-	1,637,954
	$ 1,648,989	$ 2,074,883

23. PRIOR PERIOD ADJUSTMENTS:

A payable was not recorded in the Sewer Utility Fund in the October 31, 2023 financial statements. The payable has been retroactively reported in net position.

	Sewer Utility
Net position as originally reported October 31, 2023	$ 17,244,590
Payables not previously reported	(259,469)
Net position as restated October 31, 2023	$ 16,985,121

24. EVALUATION OF SUBSEQUENT EVENTS:

The City has evaluated subsequent events through April 24, 2025, the date which the financial statements were available to be issued.

REQUIRED SUPPLEMENTARY INFORMATION OTHER THAN MD&A

CITY OF RAYTOWN, MISSOURI
REQUIRED SUPPLEMENTARY INFORMATION

Schedule of Changes in Net Pension Liability and Related Ratios - LAGERS
Last 10 Fiscal Years

Fiscal year ending June 30,	2024	2023	2022	2021	2020	2019	2018	2017	2016	2015
Total Pension Liability										
Service Cost	$ 665,918	$ 629,298	$ 637,770	$ 582,947	$ 542,561	$ 583,567	$ 656,159	$ 558,483	$ 533,362	$ 560,833
Interest on the Total Pension Liability	1,728,760	1,610,984	1,529,148	1,498,722	1,409,726	1,358,106	1,289,245	1,057,979	922,257	877,580
Benefit Changes	-	-	-	-	-	-	-	(1,773,928)	-	-
Difference between expected and actual experience	1,276,884	267,232	(203,302)	155,345	(119,154)	(695,796)	(460,643)	3,722,090	152,189	(505,106)
Assumption Changes	-	-	-	(318,364)	-	-	-	-	591,243	-
Benefit Payments	(931,705)	(757,260)	(822,350)	(724,537)	(529,787)	(498,198)	(500,347)	(347,807)	(331,216)	(276,894)
Net Change in Total Pension Liability	2,739,857	1,750,254	1,141,266	1,194,113	1,303,346	747,679	984,414	3,216,817	1,867,835	656,413
Total Pension Liability beginning	24,827,213	23,076,959	21,935,693	20,741,580	19,438,234	18,690,555	17,706,141	14,489,324	12,621,489	11,965,076
Total Pension Liability ending	$ 27,567,070	$ 24,827,213	$ 23,076,959	$ 21,935,693	$ 20,741,580	$ 19,438,234	$ 18,690,555	$ 17,706,141	$ 14,489,324	$ 12,621,489
Plan Fiduciary Net Position										
Contributions-employer	$ 923,070	$ 817,229	$ 776,394	$ 756,313	$ 680,823	$ 677,189	$ 727,010	$ 800,985	$ 822,633	$ 823,197
Contributions-employee	290,347	248,536	238,834	239,946	222,306	225,529	258,512	181,359	-	-
Pension Plan Net Investment income	1,236,043	833,873	14,728	5,042,650	210,376	989,825	1,627,298	1,364,033	(27,096)	188,721
Benefit Payments	(931,708)	(757,260)	(822,350)	(724,537)	(529,787)	(498,198)	(500,347)	(347,807)	(331,216)	(276,894)
Pension Plan Administrative expense	(31,706)	(34,867)	(24,315)	(22,616)	(28,249)	(24,769)	(17,249)	(17,199)	(17,003)	(18,549)
Other	(78,294)	(71,497)	(230,396)	250,214	(13,301)	24,388	6,240	(1,977)	(1,534)	180,399
Net Change in Plan Fiduciary Net Position	1,407,752	1,036,014	(47,105)	5,541,970	542,168	1,393,964	2,101,464	1,979,394	445,784	896,874
Plan Fiduciary Net Position beginning	23,331,016	22,295,002	22,342,107	16,800,137	16,257,969	14,864,005	12,762,541	10,783,147	10,337,363	9,440,489
Plan Fiduciary Net Position ending	$ 24,738,768	$ 23,331,016	$ 22,295,002	$ 22,342,107	$ 16,800,137	$ 16,257,969	$ 14,864,005	$ 12,762,541	$ 10,783,147	$ 10,337,363
Employer Net Pension Liability (Asset)	$ 2,828,302	$ 1,496,197	$ 781,957	$ (406,414)	$ 3,941,443	$ 3,180,265	$ 3,826,550	$ 4,943,600	$ 3,706,177	$ 2,284,126
Plan Fiduciary Net Position as a percentage of the Total Pension Liability	89.74%	93.97%	96.61%	101.85%	81.00%	83.64%	79.53%	72.08%	74.42%	81.90%
Covered Employee Payroll	$7,016,299	$5,880,209	$5,872,753	$5,976,817	$6,104,807	$5,358,307	$6,106,704	$6,973,652	$7,456,923	$6,988,224
Employer's Net Pension Liability as a percentage of covered employee payroll	40.31%	25.44%	13.31%	-6.80%	64.56%	59.35%	62.66%	70.89%	49.70%	32.69%

Notes to schedule:
none

CITY OF RAYTOWN, MISSOURI
REQUIRED SUPPLEMENTARY INFORMATION

SCHEDULE OF CONTRIBUTIONS - LAGERS
Last 10 Fiscal Years

	2024	2023	2022	2021	2020	2019	2018	2017	2016	2015
Actuarially determined contribution	$900,673	$855,912	$817,975	$763,808	$723,455	$674,187	$711,773	$757,076	$806,116	$838,990
Contributions in relation to the actuarially determined contribution	900,673	855,912	817,975	763,808	723,455	674,187	711,773	757,076	806,116	838,990
Contribution deficiency (excess)	$ -	$ -	$ -	$ -	$ -	$ -	$ -	$ -	$ -	$ -
Covered-employee payroll	$7,256,051	$6,504,914	$6,215,243	$5,979,254	$5,889,623	$5,548,441	$6,083,327	$7,295,746	$7,437,737	$7,395,788
Contributions as a percentage of covered-employee payroll	12.41%	13.16%	13.16%	12.77%	12.28%	12.15%	11.70%	10.38%	10.84%	11.34%

Valuation date 2/29/2024

Notes The roll-forward of total pension liability from February 29, 2024, to June 30, 2024, reflects expected service cost and interest reduced by actual benefit payments.

Methods and assumption used to determine contribution rates :

Actuarial cost method	Entry age normal and modified terminal funding
Amortization method	A level percentage of payroll amortization method is used to amortize the UAAL over a closed period of years.
Remaining amortization period	Multiple bases from 6 to 19 years
Asset valuation method	5 year smoothed market; 20% corridor
Inflation	2.75% wage inflation; 2.25% price inflation
Salary increases	2.75% to 6.75% including wage inflation
Investment rate of return	7.0%, net of investment expenses
Retirement age	Experience-based table of rate that are specific to the type of eligibility condition
Mortality	The healthy retiree mortality tables, for post-retirement mortality, used in evaluating allowances to be paid were 115% of the PubG-2010 Retiree Mortality Table for males and females. The disabled retiree mortality tables, for post-retirement mortality, used in evaluating allowances to be paid were 115% of the PubNS-2010 Disabled Retiree Mortality Table for males and females. The pre-retirement mortality tables used were 75% of the PubG-2010 Employee Mortality Table for males and females of General groups and 75% of the PubS-2010 Employee Mortality Tables for males and females of Police, Fire and Public Safety groups.
Other information	None

CITY OF RAYTOWN, MISSOURI
REQUIRED SUPPLEMENTARY INFORMATION

Schedule of Changes in Net Pension Liability and Related Ratios - Police (Frozen)
Last 10 Fiscal Years

Fiscal year ending December 31,	2023	2022	2021	2020	2019	2018	2017	2016	2015	2014
Total Pension Liability										
Service Cost	$ 25,206	$ 25,215	$ 35,220	$ 20,260	$ 20,407	$ 20,437	$ 15,509	$ 15,526	$ 12,633	$ 12,663
Interest on the Total Pension Liability	1,201,109	1,205,992	1,241,753	1,244,830	1,236,977	1,272,784	1,291,090	1,255,628	1,211,255	1,193,469
Difference between expected and actual experience	159,630	158,138	38,703	175,443	139,039	(379,418)	(100,898)	263,758	148,107	(167,955)
Assumption Changes	(130,686)	-	816,986	(51,159)	150,340	(45,424)	(277,355)	-	207,116	-
Benefit Payments	(1,470,833)	(1,445,969)	(1,453,379)	(1,450,204)	(1,428,693)	(1,248,899)	(1,107,281)	(1,008,095)	(974,294)	(899,749)
Net Change in Total Pension Liability	(215,574)	(56,624)	679,283	(60,830)	118,070	(380,520)	(178,935)	526,817	604,817	138,428
Total Pension Liability beginning	17,883,857	17,940,481	17,261,198	17,322,028	17,203,958	17,584,478	17,763,413	17,236,596	16,631,779	16,493,351
Total Pension Liability ending	$ 17,668,283	$ 17,883,857	$ 17,940,481	$ 17,261,198	$ 17,322,028	$ 17,203,958	$ 17,584,478	$ 17,763,413	$ 17,236,596	$ 16,631,779
Plan Fiduciary Net Position										
Contributions-employer	$ 697,222	$ 660,895	$ 648,688	$ 635,147	$ 590,127	$ 593,459	$ 608,134	$ 562,862	$ 510,320	$ 509,880
Pension Plan Net Investment income	1,455,035	(1,690,835)	1,620,779	1,142,827	1,981,217	(678,399)	1,373,429	633,761	(157,302)	512,776
Benefit Payments	(1,470,833)	(1,445,969)	(1,453,379)	(1,450,204)	(1,428,693)	(1,248,899)	(1,107,281)	(1,008,095)	(974,294)	(899,749)
Pension Plan Administrative expense	(23,530)	(23,226)	(23,594)	(30,661)	(33,985)	(20,035)	(21,491)	(12,748)	(14,400)	(99,319)
Net Change in Plan Fiduciary Net Position	657,894	(2,499,135)	792,494	297,109	1,108,666	(1,353,874)	852,791	175,780	(635,676)	23,588
Plan Fiduciary Net Position beginning	9,308,244	11,807,379	11,014,885	10,717,776	9,609,110	10,962,984	10,110,193	9,934,413	10,570,089	10,546,501
Plan Fiduciary Net Position ending	$ 9,966,138	$ 9,308,244	$ 11,807,379	$ 11,014,885	$ 10,717,776	$ 9,609,110	$ 10,962,984	$ 10,110,193	$ 9,934,413	$ 10,570,089
Employer Net Pension Liability (Asset)	$ 7,702,145	$ 8,575,613	$ 6,133,102	$ 6,246,313	$ 6,604,252	$ 7,594,848	$ 6,621,494	$ 7,653,220	$ 7,302,183	$ 6,061,690
Plan Fiduciary Net Position as a percentage of the Total Pension Liability	56.41%	52.05%	65.81%	63.81%	61.87%	55.85%	62.34%	56.92%	57.64%	63.55%
Covered Employee Payroll	$0	$0	$0	$0	$0	$0	$0	$0	$0	$0
Employer's Net Pension Liability as a percentage of covered employee payroll	0.00%	0.00%	0.00%	0.00%	0.00%	0.00%	0.00%	0.00%	0.00%	0.00%

Notes to schedule:

CITY OF RAYTOWN, MISSOUR
REQUIRED SUPPLEMENTARY INFORMATION

SCHEDULE OF CONTRIBUTIONS - Police (Frozen)
Last 10 Fiscal Years

	2023	2022	2021	2020	2019	2018	2017	2016	2015	2014
Actuarially determined contribution	$ 697,222	$ 660,895	$ 648,688	$ 635,147	$ 590,127	$ 593,459	$ 608,134	$ 562,862	$ 513,291	$ 508,285
Contributions in relation to the actuarially determined contribution	697,222	660,895	648,688	635,147	590,127	593,459	608,134	562,862	510,320	509,880
Contribution deficiency (excess	$ -	$ -	$ -	$ -	$ -	$ -	$ -	$ -	$ 2,971	$ (1,595)
Covered-employee payroll									**	$ 2,962,341
Contributions as a percentage of covered-employee payroll									**	17.21%

Valuation date 1/1/2023

Notes
* Adjusted to reflect 14-month plan year
** Plan benefits frozen at 12/31/13. Pay data not reported after that date.

Methods and assumption used to determine contribution rate:

Actuarial cost method	Traditional unit credit
Amortization method	Closed
Remaining amortization period	20 years
Asset valuation method	5 year smoothed market
Salary increases	4% (Plan is frozen, scale is for death benefits only)
Investment rate of return	7.0% net of fees, 2.5% inflation component
Retirement age	Age 55
Mortality	Public Safety 2010 mortality tables for employees and annuitants, projected with generational improvements using scale MP-2024. Previously, scale MP-2021 was used.
Other information	None

CITY OF RAYTOWN, MISSOURI
REQUIRED SUPPLEMENTARY INFORMATION

Schedule of Changes in OPEB Liability and Related Ratios
Last 7 fiscal years

	2023	2023	2022	2021	2020	2019	2018
Total OPEB Liability							
Service Cost	$ 12,007	$ 10,696	$ 20,785	$ 17,238	$ 16,125	$ 19,763	$ 29,277
Interest	17,101	13,612	8,373	6,734	10,699	16,053	19,533
Benefit Changes	-	-	-	-	-	(119,472)	(158,872)
Difference between expected and actual experience	(58,111)	41,994	(32,247)	37,739	(125,003)	-	-
Assumption Changes	(47,756)	(6,740)	(59,619)	15,491	65,371	21,521	(20,077)
Benefit Payments	(3,000)	(8,000)	(9,000)	(1,000)	(9,000)	(20,000)	(26,000)
Net Change in Total OPEB Liability	(79,759)	51,562	(71,708)	76,202	(41,808)	(82,135)	(156,139)
Total OPEB Liability beginning	330,823	279,261	350,969	274,767	316,575	398,710	554,849
Total OPEB Liability ending	$ 251,064	$ 330,823	$ 279,261	$ 350,969	$ 274,767	$ 316,575	$ 398,710
Covered Employee Payroll	$ 6,260,020	$ 5,616,986	$ 5,616,986	$ 5,104,400	$ 5,104,400	$ 6,804,388	$ 6,804,388
Total OPEB Liability as a percentage of covered employee payroll	4.01%	5.89%	4.97%	6.88%	5.38%	4.65%	5.86%

Notes to schedule:
Only seven years are being shown, as other years come available they will be included until 10 years of data is shown.

CITY OF RAYTOWN, MISSOURI
REQUIRED SUPPLEMENTARY INFORMATION

SCHEDULE OF CONTRIBUTIONS - OPEB
Last 7 Fiscal Years

	2024	2023	2022	2021	2020	2019	2018
Actuarially determined contribution	$ 7,000	$ 18,000	$ 29,000	$ 8,000	$ 9,000	$ 20,000	$ 26,000
Contributions in relation to the actuarially determined contribution	4,000	10,000	20,000	7,000	9,000	20,000	26,000
Contribution deficiency (excess)	$ 3,000	$ 8,000	$ 9,000	$ 1,000	$ -	$ -	$ -
Covered-employee payroll	$ 6,260,020	$ 5,616,986	$ 5,616,986	$ 5,104,400	$ 5,104,400	$ 6,804,388	$ 6,804,388
Contributions as a percentage of covered-employee payroll	0.06%	0.18%	0.36%	0.14%	0.18%	0.29%	0.38%

Valuation date 7/1/2023

Notes The results of the July 1, 2023 valuation were projected to the measurement date using standard actuarial techniques.

Methods and assumption used to determine contribution rates:

Actuarial cost method Entry age normal - Level % of pay

Medical trend rate

Year	Trend
2023-2024	7.50%
2024-2025	7.25%
2025-2026	7.00%
2026-2027	6.75%
2027-2028	6.50%
2028-2029	6.25%
2029-2030	6.00%
2030-2031	5.75%
2031-2032	5.50%
2032-2033	5.25%
2033-2034	5.00%
2034-2035	4.75%
Thereafter	4.50%

Participation rate The assumed retiree enrollment rate for future retiring employees is 25% for retirement age 60 to 63.5.
15% for retirement age 55 to 59, and 10% for retirement age less than 55

Healthy life mortality SOA Pub-2010 Public Retirement Plans Headcount-weighted Mortality with Scale MP-2021 Full Generational Improvement.

Disabled life mortality SOA Pub-2010 Disabled Retiree Headcount-weighted Mortality Scale MP-2021 Full Generational Improvement

Turnover Incidence Assumed turnover rates are based on rates used for the LAGERS pension actuarial valuation.
Turnover rates are not applied when retirement eligibility is achieved

Years of service	Police	General (Male)	General (Female)
0-1	18%	20%	23%
1-2	17%	18%	21%
2-3	16%	16%	18%
3-4	14%	13%	15%
4-5	13%	12%	13%

Age	Police	General (Male)	General (Female)
25	10.8%	8.8%	12.4%
30	8.5%	7.1%	10.2%
35	6.3%	5.6%	7.8%
40	4.6%	4.1%	5.8%
45	n/a	3.1%	4.4%
50	2.1%	2.4%	3.5%

CITY OF RAYTOWN, MISSOURI
REQUIRED SUPPLEMENTARY INFORMATION

SCHEDULE OF CONTRIBUTIONS - OPEB (Continued)
Last 7 Fiscal Years

Retirement Age

Assumed rates are based on those used for the LAGERS pension actuarial valuation. Retirement rates project the annual probability of retiring for eligible employees.

Age	Police	General (Male)	General (Female)
55	100.0%	n/a	n/a
55-59	n/a	3.0%	3.0%
60-61	n/a	10.0%	10.0%
62	n/a	25.0%	15.0%
63-64	n/a	20.0%	15.0%
65	n/a	25.0%	25.0%
66	n/a	25.0%	30.0%
67-68	n/a	20.0%	25.0%
69	n/a	20.0%	20.0%
70+	n/a	100.0%	100.0%

Disability Rates

Assumed rates are based on those used for the LAGERS pension actuarial valuation. Rates of disability were used to estimate the probability of becoming disabled.

Age	Police	General (Male)	General (Female)
30	0.11%	0.10%	0.03%
40	0.22%	0.18%	0.09%
45	0.34%	0.25%	0.15%
50	0.53%	0.37%	0.22%
55	0.88%	0.57%	0.32%
60	n/a	0.86%	0.45%

Other information: Only the seven years are being shown, as other years come available they will be included until 10 years of data is shown.

CITY OF RAYTOWN, MISSOURI
BUDGETARY COMPARISON SCHEDULE --
GENERAL FUND
FOR THE YEAR ENDED OCTOBER 31, 2024

	Budgeted Amounts		Actual Amounts, Budgetary Basis	Variance with Final Budget Positive (Negative)
	Original	Final		
REVENUES:				
Taxes	$ 10,205,244	$ 10,205,244	$ 11,127,209	$ 921,965
Licenses and permits	539,100	539,100	631,719	92,619
Intergovernmental	3,250,026	3,250,026	1,648,989	(1,601,037)
Charges for services	81,950	81,950	102,272	20,322
Fees and fines	265,800	265,800	165,365	(100,435)
Investment earnings	472,691	472,691	843,495	370,804
Other	40,900	40,900	80,029	39,129
Total revenues	14,855,711	14,855,711	14,599,078	(256,633)
EXPENDITURES:				
Current:				
General government	2,973,889	2,975,113	2,470,338	504,775
Public safety	7,130,463	7,173,006	7,101,122	71,884
Public works	2,714,998	2,734,085	2,322,908	411,177
Community development	1,366,127	1,372,258	1,332,540	39,718
Capital outlay	40,000	205,569	170,130	35,439
Debt service:				
Principal	-	-	45,794	(45,794)
Interest and other charges	-	-	9,206	(9,206)
Total expenditures	14,225,477	14,460,031	13,452,038	1,007,993
Excess of revenues over expenditures	630,234	395,680	1,147,040	751,360
OTHER FINANCING SOURCES (USES):				
Transfers in	1,349,670	1,349,670	1,367,034	17,364
Transfers out	(2,900,000)	(2,375,141)	(1,285,925)	1,089,216
Total other financing sources (uses)	(1,550,330)	(1,025,471)	81,109	1,106,580
Net change in fund balances	(920,096)	(629,791)	1,228,149	1,857,940
Fund balances - beginning	11,984,229	11,984,229	11,984,229	-
Fund balances - ending	$ 11,064,133	$ 11,354,438	$ 13,212,378	$ 1,857,940

CITY OF RAYTOWN, MISSOURI
BUDGETARY COMPARISON SCHEDULE --
TRANSPORTATION SALES TAX FUND
FOR THE YEAR ENDED OCTOBER 31, 2024

	Budgeted Amounts		Actual Amounts, Budgetary Basis	Variance with Final Budget Positive (Negative)
	Original	Final		
REVENUES:				
Taxes	$ 1,600,000	$ 1,600,000	$ 1,772,271	$ 172,271
Intergovernmental	10,000	10,000	-	(10,000)
Investment earnings	45,161	45,161	46,494	1,333
Total revenues	1,655,161	1,655,161	1,818,765	163,604
EXPENDITURES:				
Current,				
Public works	535,150	535,150	450,896	84,254
Capital outlay	728,000	1,700,509	1,420,506	280,003
Total expenditures	1,263,150	2,235,659	1,871,402	364,257
Excess (deficiency) of revenues over expenditures	392,011	(580,498)	(52,637)	527,861
OTHER FINANCING SOURCES (USES):				
Transfers in	-	500,000	-	(500,000)
Transfers out	(360,000)	(360,000)	(369,260)	(9,260)
Total other financing sources	(360,000)	140,000	(369,260)	(509,260)
Net change in fund balances	32,011	(440,498)	(421,897)	18,601
Fund balances - beginning	672,217	672,217	672,217	-
Fund balances - ending	$ 704,228	$ 231,719	$ 250,320	$ 18,601

CITY OF RAYTOWN, MISSOURI
BUDGETARY COMPARISON SCHEDULE --
TIF FUND
FOR THE YEAR ENDED OCTOBER 31, 2024

	Budgeted Amounts		Actual Amounts, Budgetary Basis	Variance with Final Budget Positive (Negative)
	Original	Final		
REVENUES:				
Intergovernmental	$ 1,328,500	$ 1,328,500	$ 1,637,954	$ 309,454
Investment earnings	57,966	57,966	89,425	31,459
Total revenues	1,386,466	1,386,466	1,727,379	340,913
EXPENDITURES:				
Current,				
Community development	139,700	145,200	283,800	(138,600)
Debt Service:				
Principal	2,295,000	2,295,000	2,295,000	-
Interest and other charges	628,800	628,800	628,800	-
Total expenditures	3,063,500	3,069,000	3,207,600	(138,600)
Deficiency of revenues over expenditures	(1,677,034)	(1,682,534)	(1,480,221)	202,313
OTHER FINANCING SOURCES,				
Transfers in	1,699,600	1,699,600	1,664,198	(35,402)
Net change in fund balances	22,566	17,066	183,977	166,911
Fund balances - beginning	4,005,306	4,005,306	4,005,306	-
Fund balances - ending	$ 4,027,872	$ 4,022,372	$ 4,189,283	$ 166,911

CITY OF RAYTOWN, MISSOURI
COMBINING BALANCE SHEET --
NONMAJOR GOVERNMENTAL FUNDS
OCTOBER 31, 2024

	Park	Capital Sales Tax	Public Safety Sales Tax	Risk Management	Storm Water	Capital Improvements	Total Governmental Funds
ASSETS							
Cash and investments	$ 969,579	$ 2,144,584	$ 790,606	$ 204,900	$ 244,240	$ 1,101,225	$ 5,455,134
Taxes receivable, net	66,764	245,990	327,986	-	20,499	-	661,239
Accounts receivable, net	-	-	-	14,158	-	-	14,158
Grants receivable	64,415	-	-	-	-	-	64,415
Accrued interest	1,711	3,696	1,450	302	550	1,866	9,575
Loan receivable	-	-	-	-	-	196,402	196,402
Due from other funds	2,021	-	-	-	-	-	2,021
Prepaid expenses	59,357	-	46,276	81,003	-	-	186,636
Total assets	$ 1,163,847	$ 2,394,270	$ 1,166,318	$ 300,363	$ 265,289	$ 1,299,493	$ 6,589,580
LIABILITIES							
Accounts payable	$ 4,187	$ 24,643	$ 37,610	$ 22,263	$ 81,871	$ 63,206	$ 233,780
Accrued expenses	23,913	-	-	-	-	-	23,913
Due to other funds	5,671	51,157	29,755	88,785	14,268	-	189,636
Total liabilities	33,771	75,800	67,365	111,048	96,139	63,206	447,329
DEFERRED INFLOWS OF RESOURCES							
Wellness credit	-	-	-	19,376	-	-	19,376
Fund balances							
Nonspendable,							
Prepaid items	59,357	-	46,276	81,003	-	-	186,636
Restricted:							
Public safety	-	-	1,052,677	-	-	-	1,052,677
Public works	-	-	-	-	169,150	1,236,287	1,405,437
Parks and recreation	1,070,719	-	-	-	-	-	1,070,719
Capital projects	-	2,318,470	-	-	-	-	2,318,470
Assigned to,							
General government	-	-	-	88,936	-	-	88,936
Total fund balances	1,130,076	2,318,470	1,098,953	169,939	169,150	1,236,287	6,122,875
Total liabilities, deferred inflows, and fund balances	$ 1,163,847	$ 2,394,270	$ 1,166,318	$ 300,363	$ 265,289	$ 1,299,493	$ 6,589,580

CITY OF RAYTOWN, MISSOURI
COMBINING STATEMENT OF REVENUES, EXPENDITURES, AND CHANGES IN FUND BALANCE -- NONMAJOR GOVERNMENTAL FUNDS
FOR THE YEAR ENDED OCTOBER 31, 2024

	Park	Capital Sales Tax	Public Safety Sales Tax	Risk Management	Storm Water	Capital Improvements	Total Governmental Funds
REVENUES:							
Taxes	$ 1,040,570	$ 1,464,691	$ 1,952,921	$ -	$ 122,058	$ -	$ 4,580,240
Intergovernmental	85,152	6,075	-	-	345,702	-	436,929
Charges for service	64,114	-	-	-	-	-	64,114
Use of money and property	71,094	103,327	30,194	4,343	35,991	119,383	364,332
Miscellaneous	23,392	-	-	101,938	-	-	125,330
Total revenues	1,284,322	1,574,093	1,983,115	106,281	503,751	119,383	5,570,945
EXPENDITURES:							
Current:							
General government	-	-	-	53,036	-	-	53,036
Parks and recreation	1,073,008	-	-	-	-	-	1,073,008
Public safety	-	-	410,321	-	-	-	410,321
Public works	-	-	-	-	116,206	66,667	182,873
Capital outlay	187,524	810,623	-	-	1,321,837	-	2,319,984
Total expenditures	1,260,532	810,623	410,321	53,036	1,438,043	66,667	4,039,222
Excess (deficiency) of revenues over expenditures	23,790	763,470	1,572,794	53,245	(934,292)	52,716	1,531,723
OTHER FINANCING SOURCES (USES):							
Sale of capital assets	4,811	895	-	-	-	-	5,706
Transfers in	3,582	-	-	80,000	449,689	-	533,271
Transfers out	(35,151)	(283,589)	(1,537,143)	-	(32,491)	-	(1,888,374)
Total other financing sources and (uses)	(26,758)	(282,694)	(1,537,143)	80,000	417,198	-	(1,349,397)
Net change in fund balances	(2,968)	480,776	35,651	133,245	(517,094)	52,716	182,326
Fund balances - beginning	1,133,044	1,837,694	1,063,302	36,694	686,244	1,183,571	5,940,549
Fund balances - ending	$ 1,130,076	$ 2,318,470	$ 1,098,953	$ 169,939	$ 169,150	$ 1,236,287	$ 6,122,875

CITY OF RAYTOWN, MISSOURI
COMBINING STATEMENT OF FIDUCIARY NET POSITION -
FIDUCIARY FUNDS - CUSTODIAL FUNDS
YEAR ENDED OCTOBER 31, 2024

	350 Highway TDD	Ditzler CID	Total Custodial Funds
ASSETS:			
Pooled cash and investments	$ 71,996	$ -	$ 71,996
Taxes receivable, net	13,795	63,206	77,001
Total assets	$ 85,791	$ 63,206	$ 148,997
LIABILITIES,			
Due to others	85,791	$ 63,206	$ 148,997
NET POSITION	$ -	$ -	$ -

CITY OF RAYTOWN, MISSOURI
COMBINING STATEMENT OF CHANGES IN NET POSITION
FIDUCIARY FUNDS - CUSTODIAL FUNDS
OCTOBER 31, 2024

	350 Highway TDD	Ditzler CID	Total Custodial Funds
Additions:			
Taxes collected for other governments	$ 83,457	$ -	$ 83,457
Interest and dividends	1,653	-	1,653
Total additions	85,110	-	85,110
Deductions:			
Taxes distributed to other governments	84,275	-	84,275
Administrative expenses and other	835	-	835
Total deductions	85,110	-	85,110
Change in fiduciary net position	-	-	-
Net position, beginning of year	-	-	-
Net position, end of year	$ -	$ -	$ -

CITY OF RAYTOWN, MISSOURI
BUDGETARY COMPARISON SCHEDULE --
PARK FUND
FOR THE YEAR ENDED OCTOBER 31, 2024

	Budgeted Amounts		Actual Amounts, Budgetary Basis	Variance with Final Budget Positive (Negative)
	Original	Final		
REVENUES:				
Taxes	$ 1,116,302	$ 1,116,302	$ 1,040,570	$ (75,732)
Intergovernmental	1,587,500	1,587,500	85,152	(1,502,348)
Charges for services	53,200	53,200	64,114	10,914
Investment earnings	47,000	47,000	71,094	24,094
Miscellaneous	11,968	11,968	23,392	11,424
Total revenues	2,815,970	2,815,970	1,284,322	(1,531,648)
EXPENDITURES:				
Current,				
Parks and recreation	1,224,404	1,232,656	1,073,008	159,648
Capital outlay	2,041,000	2,041,000	187,524	1,853,476
Total expenditures	3,265,404	3,273,656	1,260,532	2,013,124
Excess (deficiency) of revenues over expenditures	(449,434)	(457,686)	23,790	481,476
OTHER FINANCING SOURCES (USES):				
Proceeds from sale capital assets	15,000	15,000	4,811	(10,189)
Transfers in	-	-	3,582	3,582
Transfers out	(33,600)	(33,600)	(35,151)	(1,551)
Total other financing sources (uses)	(18,600)	(18,600)	(26,758)	(8,158)
Net change in fund balances	(468,034)	(476,286)	(2,968)	473,318
Fund balances - beginning	1,133,044	1,133,044	1,133,044	-
Fund balances - ending	$ 665,010	$ 656,758	$ 1,130,076	$ 473,318

CITY OF RAYTOWN, MISSOURI
BUDGETARY COMPARISON SCHEDULE --
CAPITAL SALES TAX FUND
FOR THE YEAR ENDED OCTOBER 31, 2024

	Budgeted Amounts		Actual Amounts, Budgetary Basis	Variance with Final Budget Positive (Negative)
	Original	Final		
REVENUES:				
Taxes	$ 1,350,000	$ 1,350,000	$ 1,464,691	$ 114,691
Intergovernmental	9,000	9,000	6,075	(2,925)
Investment earnings	48,109	48,109	103,327	55,218
Total revenues	1,407,109	1,407,109	1,574,093	166,984
EXPENDITURES,				
Capital outlay	1,503,714	1,478,616	810,623	667,993
Excess (deficiency) of revenues over expenditures	(96,605)	(71,507)	763,470	834,977
OTHER FINANCING SOURCES (USES):				
Proceeds from sale capital assets	10,000	10,000	895	(9,105)
Transfers out	(264,000)	(264,000)	(283,589)	(19,589)
Total other financing sources (uses)	(254,000)	(254,000)	(282,694)	(28,694)
Net change in fund balances	(350,605)	(325,507)	480,776	806,283
Fund balances - beginning	1,837,694	1,837,694	1,837,694	-
Fund balances - ending	$ 1,487,089	$ 1,512,187	$ 2,318,470	$ 806,283

CITY OF RAYTOWN, MISSOURI
BUDGETARY COMPARISON SCHEDULE --
PUBLIC SAFETY SALES TAX FUND
FOR THE YEAR ENDED OCTOBER 31, 2024

	Budgeted Amounts		Actual Amounts, Budgetary Basis	Variance with Final Budget Positive (Negative)
	Original	Final		
REVENUES:				
Taxes	$ 1,800,000	$ 1,800,000	$ 1,952,921	$ 152,921
Investment earnings	27,594	27,594	30,194	2,600
Total revenues	1,827,594	1,827,594	1,983,115	155,521
EXPENDITURES,				
Current,				
Public Safety	427,249	525,249	410,321	114,928
Excess of revenues over expenditures	1,400,345	1,302,345	1,572,794	270,449
OTHER FINANCING USES,				
Transfers out	(180,000)	(1,529,670)	(1,537,143)	(7,473)
Net change in fund balances	1,220,345	(227,325)	35,651	262,976
Fund balances - beginning	1,063,302	1,063,302	1,063,302	-
Fund balances - ending	$ 2,283,647	$ 835,977	$ 1,098,953	$ 262,976

CITY OF RAYTOWN, MISSOURI
BUDGETARY COMPARISON SCHEDULE --
RISK MANAGEMENT FUND
FOR THE YEAR ENDED OCTOBER 31, 2024

	Budgeted Amounts		Actual Amounts, Budgetary Basis	Variance with Final Budget Positive (Negative)
	Original	Final		
REVENUES:				
Investment earnings	$ 1,200	$ 1,200	$ 4,343	$ 3,143
Miscellaneous	50,000	50,000	101,938	51,938
Total revenues	51,200	51,200	106,281	55,081
EXPENDITURES,				
Current,				
General government	120,600	120,600	53,036	67,564
Excess (deficiency) of revenues over expenditures	(69,400)	(69,400)	53,245	122,645
OTHER FINANCING SOURCES,				
Transfers in	80,000	80,000	80,000	-
Net change in fund balances	10,600	10,600	133,245	122,645
Fund balances - beginning	36,694	36,694	36,694	-
Fund balances - ending	$ 47,294	$ 47,294	$ 169,939	$ 122,645

CITY OF RAYTOWN, MISSOURI
BUDGETARY COMPARISON SCHEDULE --
STORM WATER FUND
FOR THE YEAR ENDED OCTOBER 31, 2024

	Budgeted Amounts		Actual Amounts, Budgetary Basis	Variance with Final Budget Positive (Negative)
	Original	Final		
REVENUES:				
Taxes	$ 110,000	$ 110,000	$ 122,058	$ 12,058
Intergovernmental	4,314,660	4,314,660	345,702	(3,968,958)
Investment earnings	18,684	18,684	35,991	17,307
Total revenues	4,443,344	4,443,344	503,751	(3,939,593)
EXPENDITURES:				
Current,				
Public works	153,850	178,709	116,206	62,503
Capital outlay	6,464,660	7,113,150	1,321,837	5,791,313
Total expenditures	6,618,510	7,291,859	1,438,043	5,853,816
Deficiency of revenues over expenditures	(2,175,166)	(2,848,515)	(934,292)	1,914,223
OTHER FINANCING SOURCES (USES):				
Transfers in	2,000,000	2,024,859	449,689	(1,575,170)
Transfers out	(22,000)	(22,000)	(32,491)	(10,491)
Total other financing sources (uses)	1,978,000	2,002,859	417,198	(1,585,661)
Net change in fund balances	(197,166)	(845,656)	(517,094)	328,562
Fund balances - beginning	686,244	686,244	686,244	-
Fund balances - ending	$ 489,078	$ (159,412)	$ 169,150	$ 328,562

CITY OF RAYTOWN, MISSOURI
BUDGETARY COMPARISON SCHEDULE --
CAPITAL IMPROVEMENTS FUND
FOR THE YEAR ENDED OCTOBER 31, 2024

	Budgeted Amounts		Actual Amounts, Budgetary Basis	Variance with Final Budget Positive (Negative)
	Original	Final		
REVENUES,				
Investment earnings	$ 125,000	$ 125,000	$ 119,383	$ (5,617)
EXPENDITURES,				
Current,				
Public works	18,950	18,950	66,667	(47,717)
Excess of revenues over expenditures	106,050	106,050	52,716	(53,334)
Fund balances - beginning	1,183,571	1,183,571	1,183,571	-
Fund balances - ending	$ 1,289,621	$ 1,289,621	$ 1,236,287	$ (53,334)

Troutt Beeman & Co., P.C.
CPAs & BUSINESS ADVISORS

REPORT ON COMPLIANCE FOR THE U.S. DEPARTMENT OF TREASURY CORONAVIRUS STATE AND LOCAL FISCAL RECOVERY FUNDS PROGRAM (CSLFRF) REQUIREMENT FOR AN ALTERNATIVE CSLFRF COMPLIANCE EXAMINATION ENGAGEMENT

Independent Accountant's Report

To the Honorable Mayor
and the Members of the
Board of Aldermen
City of Raytown, Missouri

We have examined the City of Raytown Missouri's (the City) compliance with the compliance requirements "activities allowed or unallowed" and "allowable cost/cost principles" (the specified requirements) as described in Part IV "Requirements for an Alternative Compliance Examination Engagement for Recipients That Would Otherwise be Required to Undergo a Single Audit or Program-Specific Audit as a Result of Receiving Coronavirus State and Local Fiscal Recovery Funds" of the CSLFRF section of the 2024 OMB Compliance Supplement (referred to herein as "Requirements for an Alternative CSLFRF Compliance Examination Engagement") during the period ended October 31, 2024. Management of the City is responsible for the City's compliance with the specified requirements. Our responsibility is to express an opinion on the City's compliance with the specified requirements based on our examination.

Our examination was conducted in accordance with attestation standards established by the AICPA *and, the standards applicable to attestation engagements contained in Government Auditing Standards, issued by the Comptroller General of the United States; and in the "Requirements for an Alternative CSLFRF Compliance Examination Engagement"*. Those standards and requirements require that we plan and perform the examination to obtain reasonable assurance about whether the City complied, in all material respects, with the specified requirements referenced above. An examination involves performing procedures to obtain evidence about whether the City complied with the specified requirements. The nature, timing, and extent of the procedures selected depend on our judgment, including an assessment of the risks of material noncompliance, whether due to fraud or error. We believe that the evidence we obtained is sufficient and appropriate to provide a reasonable basis for our opinion.

We are required to be independent and meet our other ethical responsibilities in accordance with relevant ethical requirements relating to the engagement.

Our examination does not provide a legal determination on the City's compliance with specified requirements.

In our opinion, the City complied, in all material respects, with the specified requirements referenced above during the year ended October 31, 2024.

Other Reporting Required by Government Auditing Standards

In accordance with Government Auditing Standards, we are required to report all deficiencies that are considered to be significant deficiencies or material weaknesses in internal control; fraud, and noncompliance with provisions of laws, regulations, contracts or grant agreements that have a material effect on the City's compliance with the specified requirements and any other instances that warrant the attention of those charged with governance. We are also required to obtain and report the views of responsible officials concerning the findings, conclusions, and recommendations, as well as any planned corrective actions. We performed our examination to express an opinion on the City's compliance with the specified requirements and not for the purpose of expressing an opinion on the internal control over the specified requirements or on compliance and other matters; accordingly, we express no such opinions. The results of our tests disclosed no matters that are required to be reported under Government Auditing Standards.

Intended Purpose

The purpose of this examination report is solely to express an opinion on whether the City complied, in all material respects with the specified requirements referenced above during the year ended October 31, 2024. Accordingly, this report is not suitable for any other purpose.

Truitt, Beeman & Co., P.C.
Harrisonville, Missouri
April 28, 2025

MINUTES
RAYTOWN BOARD OF ALDERMEN
MAY 6, 2025
REGULAR SESSION NO. 2
RAYTOWN CITY HALL
10000 EAST 59TH STREET
RAYTOWN, MISSOURI 64133
AND
ONLINE ZOOM WEBINAR
7:00 P.M.

Mayor Michael McDonough called the May 6, 2025, Board of Aldermen Regular Meeting to order at 7:02 p.m. Ray Mabion of the Bethlehem Kingdom Center provided the invocation and led the pledge of allegiance.

Roll was called by Teresa Henry, City Clerk, and the attendance was as follows:

Present: Alderman Greg Walters, Alderman Ian Scott, Alderman Loretha Hayden, Alderman Janet Emerson, Alderman Latrice Thomas, Alderman Theresa Garza, Alderman Josh Morales, Alderman Bonnaye Mims, Alderman Diane Krizek

Absent: Alderman Jim Aziere

Proclamations/Presentations

Mayor McDonough presented a Proclamation to Captain Jared Rogers.

Mayor McDonough presented a proclamation to Teresa Henry in honor of Municipal Clerks Week.

Ashley Munoz made a presentation about her time working with the City as part of the Herndon Business Innovation Creation Internship Program.

Alderman Aziere joined the meeting at 7:08 p.m.

Public Comments

None

Comments from the Mayor

Mayor McDonough spoke on recent events and City business.

Mayor McDonough called on Police Chief Kuehl to speak regarding the Blue Shield Program.

Comments from the City Administrator

Damon Hodges, City Administrator, provided an update on the City's current projects and plans.

Committee Reports

Comments were shared by Alderman Morales.

DRAFT

LEGISLATIVE SESSION

1. CONSENT AGENDA

All matters listed under the Consent Agenda are considered to be routine by the Board of Aldermen and will be enacted by one motion without separate discussion or debate. An item designated for the Consent Agenda may be removed from the Consent Agenda at the request of the Mayor or an Alderman, where there is no objection by the remaining members of the Board. If there is an objection to removal of an item from the Consent Agenda, the item may be removed by a motion and vote of the Board.

1a. Approval of the Minutes from the April 22, 2025 Board of Aldermen Session 49

1b. Approval of the Minutes from the April 22, 2025 Board of Aldermen, Session 1

1c. R-3705-25: A RESOLUTION AUTHORIZING AND APPROVING THE REAPPOINTMENT OF WENDY MCDERMOTT TO THE JACKSON COUNTY BOARD OF EQUALIZATION TO REPRESENT THE CITY ON ISSUES RELATING TO THE CITY OF RAYTOWN. Point of Contact: Teresa Henry, City Clerk.

1d. R-3706-25: A RESOLUTION AUTHORIZING AND APPROVING THE REAPPOINTMENT OF ROBERT WALKER TO THE BOARD OF ZONING ADJUSTMENT. Point of Contact: Teresa Henry, City Clerk.

1e. R-3707-25: A RESOLUTION AUTHORIZING AND APPROVING THE APPOINTMENT OF RYAN MYERS TO THE PLANNING & ZONING COMMISSION. Point of Contact: Teresa Henry, City Clerk.

1f. R-3708-25: A RESOLUTION AUTHORIZING AND APPROVING THE APPOINTMENT OF BILL VAN BUSKIRK TO THE POLICE OFFICERS' RETIREMENT FUND BOARD OF TRUSTEES. Point of Contact: Teresa Henry, City Clerk.

Alderman Mims, seconded by Alderman Hayden, made a motion to adopt. The motion was approved by a vote of 9-1.

Ayes: Aldermen Mims, Hayden, Tush, Krizek, Emerson, Morales, Aziere, Thomas, Garza
Nays: Alderman Walters

REGULAR AGENDA

NEW BUSINESS

2. FIRST READING: Bill No. 6691-25, Section III-A-9: AN ORDINANCE AUTHORIZING AND APPROVING SUBMISSION AT THE SPECIAL ELECTION TO BE HELD AUGUST 5, 2025 TO THE QUALIFIED VOTERS OF THE CITY OF RAYTOWN, MISSOURI, THE QUESTION OF WHETHER THE CITY SHALL IMPOSE A SALES TAX IN THE AMOUNT OF ONE-FOURTH (1/4) OF ONE PERCENT FOR THE PURPOSE OF FUNDING LOCAL PARKS/STORM WATER CONTROL WITHIN THE CITY FOR A TERM OF SEVEN (7) YEARS AND IMPOSING SUCH TAX IF APPROVED BY A MAJORITY OF THE QUALIFIED VOTERS VOTING THEREON. Point of Contact: Damon Hodges, City Administrator and Dave Turner, Parks and Recreation Director.

The item was read by title only by Teresa Henry, City Clerk.

The item was presented by Dave Turner, Parks & Recreation Director, along with Damon Hodges, City Administrator.

Alderman Hayden, seconded by Alderman Mims, made a motion to suspend the rules and hold an immediate second reading. The motion was approved by a vote of 8-2.

DRAFT

Ayes: Aldermen Hayden, Mims, Thomas, Emerson, Morales, Aziere, Krizek, Garza
Nays: Aldermen Walters, Tush

The item was read for a second time by title only by Teresa Henry, City Clerk.

Alderman Emerson, seconded by Alderman Garza, made a motion to adopt. The motion was approved by a vote of 10-0.

Ayes: Aldermen Emerson, Garza, Mims, Tush, Krizek, Hayden, Morales, Walters, Aziere, Thomas
Nays: None

Became Ordinance 5783-25.

3. **R-3709-25: A RESOLUTION** AUTHORIZING AND APPROVING AN AMENDMENT TO THE AGREEMENT WITH KC SNOW PRO LLC UTILIZING THE CITY OF LEE'S SUMMIT, MISSOURI COOPERATIVE AGREEMENT FOR A TOTAL AMOUNT NOT TO EXCEED $68,437.50 AND AMEND THE FISCAL YEAR 2024-2025 BUDGET. Point of Contact: Robinson Camp, Public Works Director.

The item was read by title only by Terea Henry, City Clerk.

Robinson Camp, Public Works Director, presented the item.

Alderman Mims, seconded by Alderman Emerson, made a motion to adopt. The motion was approved by a vote of 10-0.

Ayes: Aldermen Mims, Emerson, Garza, Hayden, Morales, Thomas, Aziere, Tush, Walters, Krizek
Nays: None

CLOSED SESSION

Notice is hereby given that the Mayor and Board of Aldermen may conduct a closed session, pursuant to the following statutory provisions:

610.021(3) Hiring, firing, disciplining or promoting of particular employees by a public governmental body when personal information relating to the performance or merit of an individual employee is discussed or recorded; and/or

610.021(13) Individually identifiable personnel records, performance ratings or records pertaining to employees or applicants for employment.

Alderman Mims, seconded by Aldermen Hayden, made a motion to go into Closed Session. The motion was approved by a vote of 10-0.

Ayes: Aldermen Mims, Hayden, Morales, Tush, Krizek, Emerson, Aziere, Walters, Garza, Thomas
Nays: None

The meeting went into Closed Session at 8:00 p.m.

Alderman Mims, seconded by Alderman Tush, made a motion to adjourn the Closed Session and go back into Open Session. The motion was approved by a vote of 10-0.

DRAFT

ADJOURNMENT

Alderman Mims, seconded by Alderman Emerson, made a motion to adjourn. The motion was approved by a majority of those present.

The meeting adjourned at 9:06 p.m.

_____

Teresa M Henry, City Clerk, MRCC

DRAFT

CITY OF RAYTOWN
Request for Board Action

DATE SUBMITTED: 05/16/2025

MEETING DATE: May 20, 2025

SUBMITTED BY: **DEPARTMENT: Community Development**

Document Type: Resolution

SUBJECT/REQUEST

R-3710-25: Board of Aldermen to approve agreement for nuisance abatement services and authorize spending authority in excess of $30,000.00 but within budgeted amounts.

BACKGROUND/JUSTIFICATION

On March 10, 2025, the Community Development Department requested bids from qualified firms interested in providing mowing and abatement of nuisance violation services. Those services include, but are not limited to, mowing residential and commercial properties; removing junk, trash, and debris from residential and commercial properties; boarding up abandoned properties, and removing stagnant water from an abandoned pool, etc.

Bids were opened on April 16, 2025, and Mo Turf was the only qualified firm to submit a bid. The Community Development Department would like to enter into a two (2) year agreement with Mo Turf, with the City having the option to extend the contract for an additional two (2), two-year (2-year) terms thereafter.

Pursuant to the City's purchasing policy, expenditures of funds with a single vendor in excess of $30,000.00 annually must be approved by the Board of Aldermen. The Community Development Department budget anticipates that the costs of mowing residential and commercial properties; removing junk, trash, and debris from residential and commercial properties; boarding up abandoned properties, and removing stagnant water from an abandoned pool, etc. will exceed $30,000.00; therefore, staff is requesting Board approval to enter into an agreement with Mo Turf and approve the expenditure of funds of funds in an amount not to exceed $95,000.00 for fiscal year 2024-2025.

RECOMMENDED MOTION

Staff recommends approving agreement for nuisance abatement services and expenditure of funds in excess of $30,000.00 but within budgeted amounts.

PREVIOUS ACTION

COMMISSION/COMMITTEE REVIEW

FINANCIAL IMPACT

Contractor:	MoTurf
Amount of Request/Contract:	$95,000.00
Amount Budgeted:	$95,000.00
From Account Name and #:	Weeds/Brush 101-82-00-10-53597

REVIEWED BY

Diane Egger
Michael Graham
Jennifer Baird
Damon Hodges
Teresa Henry

LIST OF REFERENCE DOCUMENTS ATTACHED

1. Reso MO Turf Nuisance Abatement Services Agreement 2024-2025
2. MoTurf Contract Agreement 2025
3. 2025 Nuisance Abatement Bid - Monaco Property Services

SUPPORTING DOCUMENTS
(FOR CONTRACT ITEMS ONLY)

Document	Attached	If not attached, explain
Bid/RFP/RFQ: (submit all)		On file
Bid/RFP/RFQ Tabulation:		On file

RESOLUTION NO.: R-3710-25

A RESOLUTION AUTHORIZING AND APPROVING THE AN AGREEMENT WITH MO TURF FOR NUISANCE ABATEMENT SERVICES IN AN AMOUNT NOT TO EXCEED $95,000.00 FOR FISCAL YEAR 2024-2025

WHEREAS, services such as mowing and abatement of nuisance violation services which included but are not limited to, mowing residential/commercial properties; removing junk, trash, and debris from residential and commercial properties; boarding up abandoned properties, and removing stagnant water from an abandoned pool, etc. are necessary within the City of Raytown; and

WHEREAS, on March 10, 2025, the City of Raytown issued an invitation to bid for the provision of nuisance abatement services and the City received one (1) response to the invitation which was submitted by MO Turf; and

WHEREAS, the purchasing policy adopted by the City of Raytown requires that any expenditure of funds with a single vendor in excess of $30,000.00 annually be approved by the Board of Aldermen; and

WHEREAS, the Board of Aldermen find it is in the best interest of the City to authorize and approve an agreement with MO Turf for the provision of nuisance abatement services in an amount not to exceed $95,000.00 for fiscal year 2024-2025.

NOW THEREFORE, BE IT RESOLVED BY THE BOARD OF ALDERMEN OF THE CITY OF RAYTOWN, MISSOURI, AS FOLLOWS:

THAT the Agreement by and between the City of Raytown and MO Turf for the provision of nuisance abatement services within the City in an amount not to exceed $95,000.00 for fiscal year 2024-2025, attached hereto, is hereby authorized and approved; and

FURTHER THAT the City Administrator is hereby authorized to execute any and all documents and to take any and all actions necessary to effectuate the terms of the Agreement and exercise the authority granted herein on behalf of the City and the City Clerk is authorized to attest thereto.

PASSED AND ADOPTED by the Board of Aldermen and **APPROVED** by the Mayor of the City of Raytown, Missouri, the 20th day of May, 2025.

_____
Michael McDonough, Mayor

ATTEST:

_____
Teresa M. Henry, City Clerk

Approved as to Form:

_____
Jennifer M. Baird, City Attorney

CONTRACTOR FOR NUISANCE ABATEMENT SERVICES

This **AGREEMENT**, made and entered into this __12___ day of _May_, 2025, by and between the CITY OF RAYTOWN, MISSOURI, a "Missouri municipal corporation, hereinafter referred to as "City," and MO TURF CARE, hereinafter referred to as "Contractor."

WHEREAS, the accomplishment of the work and services described in this contract is necessary and essential to the operation of the City; and

WHEREAS, the City desires to engage the Contractor to render services as described in this contract, and the Contractor is willing to perform such services:

NOW THEREFORE, in consideration of the promises and covenants hereinafter contained, the parties hereto agree as follows:

ARTICLE I - DESCRIPTION OF PROJECT

The Contractor shall mow residential and commercial properties: remove overgrown vegetation and brush from residential and commercial property: remove junk. trash. and debris from residential and commercial properties: board up abandoned properties: and remove standing water from swimming pools and rank ponds as directed by the city of Raytown Community Development.

ARTICLE II - CONTRACTOR'S SCOPE OF SERVICES

A. The Contractor shall perform services relevant to the contract in accordance with the terms and conditions set forth herein. and as provided in Request for Bids. attached here to as Exhibit A. and incorporated by reference herein.

B. The Contractor hereby agrees that. immediately upon the execution of this contract and upon receipt of notification by the City. the Contractor will enter upon the duties herein prescribed. The City is not liable and will not pay the Contractor for any services rendered before written authorization is received by the Contractor from the City.

C. agrees that: The Contractor. when called to perform under this Agreement. understands and/or

I) Residential property may be fenced with a thirty-size (36) inch gate opening.

2) Commercial property may be large fields with grass up to four (4) feet tall.

3) All grass shall be cut to a height not to exceed three (3) inches. except vacant lots or open fields. which shall be to a height not to exceed four (4) inches

4) All vegetation on the property, including on any area between the property line and the curb or street pavement line including any adjacent ditch area or right-of-way, whether improved or unimproved, must be cut.

5) Vegetation in a ditch must be cut as low as possible.

6) Trimming shall be done around any structure on the property including, but not limited to, trees, poles, shrub beds, walkways, & lawn statuary. Special care shall be taken when trimming around trees so as to not inflict damage to the tree bark, limbs, or trunk. Trees will be inspected by the city representative for damages caused by the Contractor. Any damages found shall be documented by the City and a statement provided to the Contractor. The Contractor agrees to repair or replace, at its own expense, any damages to trees or other lawn items.

7) Grass clippings and large clumps of cut vegetation shall be removed from all residential and commercial property. However, raking is not required if Contractor uses a high quality mulching mower. Grass clippings may not be thrown into city streets or drainage ways.

8) Mowing in residential areas shall be completed only between the hours of 7:00 AM and 7:00 PM.

9) The Contractor shall remove and/or trim overgrown vegetation such as vines, tall grass, ground cover, brush, etc. on residential or commercial property.

10) The Contractor shall remove (load and transport) junk, trash, and debris on residential or commercial property. Contractor must dispose of all junk, trash, and debris at an off-site location intended for such material.

11) The Contractor shall install and/or repair by "boarding up" abandoned buildings to prevent entry.

12) The Contractor shall remove standing water in abandoned swimming pools or rank ponds.

D. Contractor shall be able to receive and acknowledge work orders via fax or e-mail. Contractor shall limit the services rendered to those specified in the work order issued by Community Development. Contractor shall complete work assigned by the City within three calendar days of work order being issued. It is the responsibility of the Contractor to notify the Community Development if the work order cannot be completed in consecutive days due to equipment failure, scope of work or lack of crew. Failure to comply with required response time can be grounds for termination of the contract. If mowing is interrupted by inclement weather, the Contractor shall give top priority to completing the job at the earliest possible date.

E. The Contractor agrees to employ, train, and supervise adequate personnel with appropriate qualifications and experience to provide the services under this Agreement. The Contractor will observe established standards of safety and shall take all necessary safety precautions to protect the public, Contractor's employees, and city employees and facilities from injury or damage. The Contractor shall immediately notify the City of any accident or incidents which occur as a result of the Contractor's activities on the premises.

F. The Contractor shall be courteous and tactful in contact or communication with the public; the Contractor will not tolerate any type of workplace violence committed by or against its employees. The Contractor will prohibit its employees from making threats, carrying concealed weapons, or engaging in violent activities, in connection with the services provided under this Agreement.

G. Upon notice from the City that services rendered under this Agreement did not correctly or sufficiently abate a nuisance, the Contractor agrees to return to the designated sight within 24 hours of notification by the City and correct the matter to the City's satisfaction.

ARTICLE III - MODIFICATION

All modifications to this contract must be in writing and signed by the parties hereto.

ARTICLE IV - CONTRACTOR'S FEE

The Contractor shall, upon completion of a work order, promptly submit an invoice for payment to the City of Raytown, Community Development Department, 10000 East 59th Street, Raytown, MO 64133. Invoices may be emailed, no more than 7 days after completion of the work order, to MicheleA@Raytown.mo.us and DebG@Raytown.mo.us. Each invoice shall include the following information:

A. Work Order Number
B. Date Work Order Issued
C. Date Work Order Started
D. Date Work Order Completed
E. Type of Service(s) Rendered
F. Itemized Cost per Type of Service Provided and Unit Price
G. Before and After Photos of Services Provided (time and date stamped)
H. Copy of Receipts for Disposal of Trash and/or Debris (if applicable)

Contractor must take before and after photographs of all property that 1) clearly identify the property; 2) clearly show the nuisance to be abated; 3) be signed and dated by the Contractor; and 3) be of a quality sufficient to be used as evidence in municipal court. The

photographs should accompany the Contractor's invoice for work completed and will become property of the City.

The City is exempt from State and Local Sales taxes. All transactions resulting from an executed agreement shall be deemed to have been accomplished within the State of Missouri.

ARTICLE V - COMPLIANCE WITH LAW

The Contractor agrees to comply with all federal, state, and local laws and regulations in the performance of the contract. The Contractor shall maintain an Occupational License issued by City of Raytown during the term of the contract.

ARTICLE VI - TERMINATION

A. **Termination Without Cause** – This contract may be terminated by either party upon thirty (30) days' written notice to the other party; but if any work or services hereunder is in progress, but not completed as of the notice of termination, then the contract may be extended upon written approval of the City until the work and/or services are completed and accepted by the City.

B. **City Termination For Cause** – When the City believes the Contractor has failed or refused to perform in accordance with the terms and conditions of this Agreement it may provide notice of the breach providing no less than fourteen (14) days' written notice and opportunity to cure the breach. In the event the Contractor fails to remedy the breach within the fourteen (14) day period, the City has the option to terminate the Agreement for cause. When terminated for cause, compensation for services rendered by the Contractor up to the date of termination shall be offset by the City's reasonable cost to mitigate or correct the effects of such termination.

C. **City Termination For Convenience** – The City may terminate the Agreement without notice. When terminated for convenience the City shall negotiate reasonable termination costs.

D. **Non-Appropriation** – When the governing body declines to appropriate funds to support continuation of the contract in any fiscal year of the Agreement or funding is not available at any time during the project and without prejudice on the City, the Agreement will be terminated by delivery to the Contractor of fourteen (14) days' written notice prior to the expiration of funding.

ARTICLE VII - ASSIGNMENT

This contract shall not be assigned except with the written consent of the City, and if so, assigned shall extend to and be binding upon the successors and assigns of the parties hereto.

ARTICLE VIII - DISCLOSURE

The Contractor hereby affirms that neither it nor its officers, agents or employees has made or agreed to make any valuable gift, whether in the form of service, loan, thing, or promise, to any person, or any of the person's immediate family, having the duty to recommend, the right to vote upon, or any other direct influence on the selection of Contractors to provide services to the City, within two years preceding the execution of this contract.

ARTICLE IX - INDEMNITY

The Contractor agrees to indemnify and hold harmless the City, its officers, agents, and employees, from and against all suites, actions, attorney fees, costs, expenses or claims of any character brought because of any injury or damage received or sustained by any person, persons, or property arising out of or resulting from any acts, error, or omission of the Contractor or its agents or employees. The indemnity required hereunder shall not be limited by reason of the specification of any particular insurance coverage in this contract.

ARTICLE X - INSURANCE

The Contractor agrees to procure and maintain at its expense insurance in the kinds and amounts hereinafter provided with insurance companies authorized to do business in the State of Missouri, covering all operations under this contract, whether performed by it or its agents. Before commencing work, the Contractor shall furnish to the City a certificate or certificates in a form satisfactory to the City showing that it has complied with this paragraph, naming the City as an additional insured on said policies. All certificates shall provide that the policy shall not be changed or canceled until at least thirty (30) days prior written notice shall have been given to the City. The firm shall provide evidence to the City that subconsultants, if any, shall maintain comprehensive general liability, automobile liability, workers' compensation, and professional liability insurance for not less than the amounts outlined for the submitting firm. Kinds and amounts of insurance required are as follows:

A. Workmen's Compensation Insurance. Workmen's Compensation Insurance for Contractor's employees in accordance with the provisions of the Workmen's Compensation Act of the State of Missouri.

B. Liability Insurance. .

   a. Professional Liability – Professional Liability, or Errors and Omission Insurance protection in the minimum amount of $1,000,000.00 per claim and annual aggregate.

   b. Commercial General Liability –

      i. Each Occurrence..... $1,000,000.00

ii. Personal and Advertising Injury.....$1,000,000.00

iii. Products-Completed/Operations Aggregate..... $1,000,000.00

iv. General Aggregate..... $2,000,000.00

v. Policy must include the following conditions:

1. Contractual Liability
2. Products/Completed Operations
3. Personnel/Advertising Injury
4. Independent Contractors

vi. Additional Insured: City of Raytown, Missouri

ARTICLE XI - DISCRIMINATION PROHIBITED

In performing the services required hereunder, the Contractor shall not discriminate against any person on the basis of race, color, religion, sex, national origin or ancestry, age, disability, or any other basis protected by state, federal or local law. The Contractor agrees to comply with applicable immigration laws, including the Immigration Reform & Control Act of 1990.

ARTICLE XII - ADMINISTRATION OF AGREEMENT

The City Administrator or his authorized representative shall administer this contract for the City.

ARTICLE XIII - TERM

The Agreement shall be for a period of two (2) years from date of award.

The Agreement may be extended, by mutual written modification of the Agreement, for additional terms. The City will notify the vendor, in writing, no later than thirty (30) days prior to expiration of the Agreement as to its desire for extension. Any request by the vendor for consideration of a price adjustment must be made to the City at the time of renewal and must only be based on increased cost to the vendor to provide this specific service called for in the solicitation. Verification of these increased costs shall be furnished to the City upon request. Any upward price adjustment approved by the City shall impose upon the vendor the requirement to advise and extend to the City price reductions when costs similarly decrease.

ARTICLE XIV – NOTICES

Any notice required or permitted to be given to either party under this Agreement (other than notice of work orders under Article II(D)) shall be sufficient if in writing and sent by

certified mail, return receipt requested to the following (should an email address be listed below, the Party requests a courtesy copy be emailed as well, but the official and binding notice remains by certified mail, return receipt requested as set out herein):

City:

City of Raytown, Missouri
10000 E 59th St
Raytown, MO 64133
Attn. Community Development Department
MicheleA@Raytown.mo.us
DebG@Raytown.mo.us

Contractor:

MO TURF CARE
1609 N Howard DR
Independence, MO 64050

ARTICLE XV – GOVERNING LAW.

This Agreement shall be subject to and governed by the laws of the State of Missouri as to all issues, including but not limited to the interpretation, validity, and effect of this Agreement, without regard to the place of execution, place of performance or other consideration.

ARTICLE XVI – VENUE AND JURISDICTION

The 16th Circuit Court of Jackson County, Missouri at Independence, shall have exclusive venue and jurisdiction over any dispute which arises under this Agreement, and each of the Parties hereby submits and consents to the court's exercise of jurisdiction.

ARTICLE XVII – INVALID PROVISIONS

If any provision(s) of this Agreement are deemed invalid or unenforceable, those invalid or unenforceable provisions shall not affect the other provisions and the Agreement shall be construed as if the invalid or unenforceable provisions were omitted.

ARTICLE XVII – ENTIRE UNDERSTANDING

This Agreement, together with its Exhibit A, embodies the entire understanding of the Parties with respect to the subject matter and merges with and supersedes all prior discussions, agreements, commitments, or understandings of every kind and nature relating thereto, whether oral or written, between City and Contractor.

IN WITNESS WHEREOF, the parties hereto have executed this contract to bind themselves, their partners, as successors, and legal representatives of this day and year first above written.

City of Raytown, Missouri

_____

Damon Hodges, City Administrator

MoTurf Care - Contractor

_____

By: Brian Monaco, Owner

Attest:

_____

Teresa Henry, City Clerk

Approved as to Form:

_____

Jennifer Baird, City Attorney

RECEIVED

APR 16 2025

City of Raytown

2:01 pm

MS

BID FORM

TERM AGREEMENT FOR LOT MOWING SERVICES

Lot Mowing:

Lot – Less than ¼ acre	☐ $ 50 .00 per lot
Lot – ¼ acre to 1 acre	☐ $ 75 .00 per lot
Lot – 1 acre to 3 acres	☐ $ 300 .00 per acre
Lot – Over 3 acres	☐ $ 500 .00 per hour
Debris clean-up of property prior to mowing	☐ $ 45 .00 per hour
Debris haul off	☐ $ 125 .00 per lot plus dump fees
Debris haul off	☐ $ 125 .00 per acre plus dump Fee

Description	Actual	Unit Price
Rough Mowing (brush hog) tractor w/operator	$ 100	per hour
Finish Mowing (push mower) w/operator	$ 70	per hour
Weed eater w/operator	$ 40	per hour
Power blower/sweeper w/operator	$ 40	per hour
Removal and/or spraying of noxious weeds (poison ivy, poison Oak, poison sumac, thistles, etc.) w/operator	$ 100	per hour
Chainsaw w/operator	$ 45	per hour
Tractor equipment w/operator	$ 100	per hour
Removal of Junk, Trash, and Debris	$ 45	per man per hour
Disposal Fee (for Junk, Trash, and Debris)	$ 130.00	per ton
Appliance Disposal	$ 50.00	per item
Tire Disposal	$ 10 / $ 12	non rim / rimmed
Labor only (i.e. refuse removal, etc.)	$ 45	hr
Hauling trailer w/operator	$ 125	per trailer
Dump truck w/operator	$ 200	per hour
Boarding up/securing property (including material necessary)	$ 85, $ 105, $ 200	per window, door, garage door

13. *Inspections.* At the conclusion of each job order, the Bidder shall demonstrate to the Community Development Director or their authorized representative(s) of the City that the work is fully complete and in compliance with the scope of services. Any deficiencies shall be promptly and permanently corrected by the Bidder/Contractor at the Bidder's/Contractor's sole expense prior to final acceptance of work, and normal warrantees shall be issued at point of final acceptance by the City of Raytown.

14. *No Escalation of Fees.* The pricing of services contained in the agreement for the selected Contractor shall remain in effect for the duration of the agreement. No escalation of fees will be allowed.

15. *Permits.* The successful contractor shall be responsible for obtaining all permits, and for incurring all expenses associated with those permits, prior to proceeding with the scope of work and services described in this solicitation. Included in these permits will be the "Occupational License" required of all contractors doing business within the City limits of Raytown. This license can be obtained from the Community Development Department, 10000 E 59TH Street, Raytown, Missouri, 64133.

Bids shall be signed in blue ink by the individual or authorized principals of the firm. Bids must give full firm name and address of bidder. Failure to manually sign bid form may be cause for disqualification. Person signing bids should show title or authority to bind firm in an agreement.

All Bidders/Contractors shall include, with their bids, a list of at least three (3) current references for whom comparable work has been performed and within the past 24 months. This list shall include company name, person to contact, address and telephone number. Failure to include references may be ample cause for rejection of bid as non-responsive.

Bids may be held by the City of Raytown for a period not to exceed sixty (60) days from the date of bid opening for the purpose of reviewing the bids and investigating the qualifications of bidders prior to awarding of the agreement.

The Bidder/Contractors shall ensure that the appropriate signatures and seals are affixed to the document. Bid Documents shall be sealed in an envelope, which shall be clearly labeled with the words "Bid Documents, Lot Mowing and Nuisance Abatement Services – City of Raytown, and the Bidders/Contractor's Name".

Bids are invited for the work as described above in the Standard Terms and Conditions. An agreement may be awarded to the lowest responsive and responsible bidder.

The City of Raytown reserves the right to reject any or all bids or to waive any informality in the bidding, or to negotiate and suggest modifications and amendments, which would make the bid acceptable.

Removal of standing water in swimming pool or rank pond	$100	per hour	

Company Name: Monaco Property Services

Address: 1921 N. Elsea Smith Rd
City: Independence
State: MO
Zip Code: 64056

Authorized Signature: Shelby Monaco

Print Name: Shelby Monaco

Note: Failure to submit bid on this form may be cause for disqualification

BID FORM – EQUIPMENT LISTING

Bidder shall indicate below a complete listing of all equipment that would be used in the performance of this agreement, including rolling stock, tractors, mowers, and any other specialized equipment. Indicate whether such equipment is owned by the company. Failure to complete and return this section may be cause for disqualification.

	Company Owned:	
Toro Dingo TX 1000	Yes X	No
Dump Trailers Qty 2	Yes X	No
Commercial mowers	Yes X	No
Flail mowers	Yes X	No
Chainsaws	Yes X	No
Weed Eaters	Yes X	No
Blowers	Yes X	No
Brush Knife	Yes X	No
Flat Bed Trailers	Yes X	No
45 HP Tractor	Yes X	No

Yes _____ No _____
Yes _____ No _____

Please list below three references where your company has performed similar work and within the past 24 months.

Organization: City of Independence
Contact Name: Hollie Allerson
Phone Number: 816-642-6054
General Description of Work:
Abatements / mowing

Organization: Fed EX
Contact Name: Rody Divers
Phone Number:
General Description of Work:
property maintance

Organization: Nativity of Mary
Contact Name:
Phone Number:
General Description of Work: property maintance

Brian and Shelby Monaco
1921 N Elsea Smith Rd
Independence, Missouri
64056

RECEIVED
APR 15 2025
City of Raytown
1:30pm
MS

City of Raytown
RFP
Abatement / Mowing

4/14/25

PAPER POUCH how2recycle.info

PRESS FIRMLY TO SEAL

Retail

UNITED STATES POSTAL SERVICE

64133

RDC 07

U.S. POSTAGE PAID
PME
INDEPENDENCE, MO 64055
APR 14, 2025

$31.40

S2324M506316-22

PRIORITY MAIL EXPRESS®

FLAT RATE ENVELOPE

ONE RATE ■ ANY WEIGHT

To schedule free Package Pickup, scan the QR code.

USPS.COM/PICKUP

This package is made from post-consumer waste. Please recycle - again.

UNITED STATES POSTAL SERVICE® | PRIORITY MAIL EXPRESS®

ER 188 006 224 US

CUSTOMER USE ONLY

FROM: (PLEASE PRINT) PHONE ( )

Shelby Monaco
1921 N. Elsea Smith Rd
Independence MO
64056

DELIVERY OPTIONS (Customer Use Only)

☐ **SIGNATURE REQUIRED** *Note:* The mailer must check the "Signature Required" box if the mailer: 1) Requires the addressee's signature; OR 2) Purchases additional insurance; OR 3) Purchases COD service; OR 4) Purchases Return Receipt service. If the box is not checked, the Postal Service will leave the item in the addressee's mail receptacle or other secure location without attempting to obtain the addressee's signature on delivery.

Delivery Options

☐ No Saturday Delivery (delivered next business day)

☐ Sunday/Holiday Delivery Required (additional fee, where available*)

*Refer to USPS.com® or local Post Office™ for availability.

TO: (PLEASE PRINT) PHONE ( )

City of Raytown
10000 E 59th St
Raytown, MO

ZIP + 4® (U.S. ADDRESSES ONLY)

64133

■ For pickup or USPS Tracking™, visit USPS.com or call 800-222-1811.

■ $100.00 insurance included.

PAYMENT BY ACCOUNT (if applicable)

Federal Agency Acct. No. or Postal Service™ Acct. No.

ORIGIN (POSTAL SERVICE USE ONLY)

☒ 1-Day ☐ 2-Day ☐ Military ☐ DPO

PO ZIP Code: 64055	Scheduled Delivery Date (MM/DD/YY): 4/15/25	Postage: $ 31.40	
Date Accepted (MM/DD/YY): 4/14/25	Scheduled Delivery Time: ☒ 6:00 PM	Insurance Fee: $	COD Fee: $
Time Accepted: 12:29 ☐ AM ☒ PM		Return Receipt Fee: $	Live Animal Transportation Fee: $
Special Handling/Fragile: $	Sunday/Holiday Premium Fee: $	Total Postage & Fees: $ 31.40	
Weight: lbs. 3 ozs. ☐ Flat Rate	Acceptance Employee Initials:		

DELIVERY (POSTAL SERVICE USE ONLY)

Delivery Attempt (MM/DD/YY)	Time ☐ AM ☐ PM	Employee Signature
Delivery Attempt (MM/DD/YY)	Time ☐ AM ☐ PM	Employee Signature

LABEL 11-B, NOVEMBER 2023 PSN 7690-02-000-9996

PEEL FROM THIS CORNER

PAPER how2recycle.info

UNITED STATES POSTAL SERVICE

This packaging is the property of the U.S. Postal Service® and is provided solely for use in sending Priority Mail Express® shipments. This packaging is not for resale. EP13F © U.S. Postal Service; October 2023; All rights reserved.

CITY OF RAYTOWN
Request for Board Action

DATE SUBMITTED: 05/12/2025

MEETING DATE: May 20, 2025

SUBMITTED BY: **DEPARTMENT: Public Works**

Document Type: Resolution

SUBJECT/REQUEST

R-3711-25: Approve Change Order Number 3 in the amount of $10,492.33 with Royal Construction for the Police Department Annex Building

BACKGROUND/JUSTIFICATION

Royal Construction Services, LLC has submitted change order proposals that exceed the remaining contingency funds allocated in their contract. These proposals address owner requested modifications and design issues uncovered during construction. The requested changes include:

1. Furnishing and installing dog run on the north side of evidence storage building.
2. Furnishing and installing an additional sink with an integral eyewash station in the evidence processing room and a hose bib for the future dog run area.
3. Furnishing and installing a maglock to support the city's access control system.
4. Rerouting plumbing lines below the ceiling to avoid the unconditioned attic space.
5. Installing a conduit pathway to supply power to the city's relocated storage shed.
6. Constructing a drywall chase to conceal a water service line within the existing police station.

The total cost for these proposed changes is $15,347.89, which exceeds the remaining contingency balance of $4,855.56. As a result, the project team is requesting an additional $10,492.33 to fully cover the outstanding change order costs. The project team has reviewed the proposals and finds the costs reasonable, with no objections to the amounts submitted. Please refer to the attached change order request and supporting documentation for further details.

The Administration section of the Capital Sales Tax Fund Capital Expenditures has sufficient funds to accommodate this change order overage. This is possible because the $50,000.00 budget for the Building Capacity Study will not be used, as a comparable report already exists.

RECOMMENDED MOTION

Staff recommends approval as submitted.

PREVIOUS ACTION

COMMISSION/COMMITTEE REVIEW

Special Sales Tax Review Committee approved the project on November 26, 2024.

FINANCIAL IMPACT

Contractor:	Royal Construction
Amount of Contract:	$549,980.00
Amount Budgeted:	$549,980.00
Amount Requested	$ 10,492.33
From Account Name	Capital Sales Tax Fund – Capital Expenditures
From Account Number	205-00-00-100-57000
Amount	$ 10,492.33
Total Contract Amount	$560,472.33

REVIEWED BY

Robinson Camp
Michael Graham
Jennifer Baird
Damon Hodges
Teresa Henry

LIST OF REFERENCE DOCUMENTS ATTACHED

1. Reso Police Annex Project-Change Order
2. Raytown Evidence Storage Additional Funding Request
3. Change Order #03
4. Resolution R-3672-24

SUPPORTING DOCUMENTS (FOR CONTRACT ITEMS ONLY)

Document	Attached	If not attached, explain
Secretary of State:		On File
Certificate of Insurance:		On File
E-Verify Affidavits:		On File
E-Verify proof of enrollment:		On File
Bond:		On File
IRS Form W-9:		On File
Bid/RFP/RFQ: (submit all)		On File
Bid/RFP/RFQ Tabulation:		On File
Contractor address and email:		On File
Project Exemption Certificate needed:		On File
Other:	X	Change Order

RESOLUTION NO.: R-3711-25

A RESOLUTION AUTHORIZING EXPENDITURE OF ADDITIONAL FUNDS THROUGH A CHANGE ORDER WITH ROYAL CONSTRUCTION SERVICES FOR THE POLICE DEPARTMENT ANNEX BUILDING DEMOLITION AND CONSTRUCTION PROJECT IN AMOUNT NOT TO EXCEED $10,492.33 FOR A TOTAL PROJECT AMOUNT NOT TO EXCEED $560,472.33 FOR FISCAL YEAR 2024-2025

WHEREAS, on December 3, 2024, and pursuant to Resolution No.: 3672-24, the Board of Aldermen authorized the expenditure of funds with Royal Construction Services related to the 2024 Police Department Annex Building Demolition and Construction Project within the City for a total project amount not to exceed $549,980.00; and

WHEREAS, additional funds in the amount of $10,492.33 are necessary to complete additional work on the Police Department Annex Building Demolition and Construction Project; and

WHEREAS, the Board of Aldermen find it is in the best interest of the City to authorize and approve additional funds with a change order for $10,492.33 for the Police Department Annex Building Demolition and Construction Project 2024 Street Maintenance Raytown Road Project for a total project amount not to exceed $560,472.33.

NOW THEREFORE, **BE IT RESOLVED BY THE BOARD OF ALDERMEN OF THE CITY OF RAYTOWN, MISSOURI, AS FOLLOWS:**

THAT the Board of Aldermen find it is in the best interest of the City to authorize and approve additional funds with a change order for $10,492.33 for the Police Department Annex Building Demolition and Construction Project for a total project amount not to exceed $560,472.33; and

FURTHER THAT the City Administrator is hereby authorized to execute any and all documents and to take any and all actions necessary to effectuate the terms of the Agreement and exercise the authority granted herein on behalf of the City.

PASSED AND ADOPTED by the Board of Aldermen and **APPROVED** by the Mayor of the City of Raytown, Missouri, the 20th day of May, 2025.

_____
Michael McDonough, Mayor

ATTEST:

_____
Teresa M. Henry, City Clerk

Approved as to Form:

_____
Jennifer M. Baird, City Attorney

TO: CITY OF RAYTOWN BOARD OF ALDERMEN

FROM: SCOTT VILAS, PROJECT MANAGER

SUBJECT: RAYTOWN: POLICE EVIDENCE STORAGE BUILDING ADDITIONAL FUNDING REQUEST

DATE: MAY 2, 2025

CC: ROBINSON CAMP, DIRECTOR OF PUBLIC WORKS
JEN KISSINGER, NAVIGATE BUILDING SOLUTIONS
TODD SWEENEY, NAVIGATE BUILDING SOLUTIONS

Royal Construction Services, LLC has submitted change order proposals that exceed the remaining contingency funds allocated in their contract. These proposals address owner-requested modifications and design issues uncovered during construction. The requested changes include:

1. Furnishing and installing dog run on the north side of evidence storage building.
2. Furnishing and installing an additional sink with an integral eye wash station in the evidence processing room and a hose bib for the future dog run area.
3. Furnishing and installing a maglock to support the city's access control system.
4. Rerouting plumbing lines below the ceiling to avoid the unconditioned attic space.
5. Installing a conduit pathway to supply power to the city's relocated storage shed.
6. Constructing a drywall chase to conceal a water service line within the existing police station.

The total cost for these proposed changes is $15,347.89, which exceeds the remaining contingency balance of $4,855.56. As a result, the project team is requesting an additional $10,492.33 to fully cover the outstanding change order costs.

The project team has reviewed the proposals and finds the costs reasonable, with no objections to the amounts submitted. Please refer to the attached change order request and supporting documentation for further details.

DRAFT

AIA® Document G701® – 2017

Change Order

PROJECT: *(Name and address)*	**CONTRACT INFORMATION:**	**CHANGE ORDER INFORMATION:**
Raytown Police Department Evidence Building	Contract For: General Construction Date: December 2, 2024	Change Order Number: 03 Date: May 2, 2025
OWNER: *(Name and address)* City of Raytown 10000 East 59th Street Raytown, MO 64133	**ARCHITECT:** *(Name and address)* SFS Architecture 2100 Central, Suite 31 Kansas City, Missouri 64108	**CONTRACTOR:** *(Name and address)* Royal Construction Services, LLC 2017 W. 104th Street Leawood, KS 66206

THE CONTRACT IS CHANGED AS FOLLOWS:
(Insert a detailed description of the change and, if applicable, attach or reference specific exhibits. Also include agreed upon adjustments attributable to executed Construction Change Directives.)
COR #01 Rev 2: Added Dog Run - Furnish and install new dogrun per Dog Run Sketch Rev 2 dated 04/29/25: $6,270.94
COR #07: Eye Wash and Ext. Hose Bib - Furnish and install Eye wash station with integrated sink and Hose bib: $2,316.51
COR #08: Maglock at Gate - Furnish and Installation of Maglock at gate between evidence processing and storage: $1,577.49
COR #09: Plumbing Line Re-routing - relocate plumbing lines below ceilng due to unconditioned attic space: $1,265.49
COR #10: Conduit pathway for storage shed - Furnish and install conduit pathway for power at exterior shed: $1,724.36
COR #11: Plumbing Line Chase - Furnish and install drywall chase to conceal added plumbing line at existing station: $2,193.10

The original Owner Coordination / Contingency Allowance prior to this change order is $4,855.56

The Owner Coordination / Contingency Allowance after this change order is $0.00

The original Contract Sum was	$	549,980.00
The net change by previously authorized Change Orders	$	0.00
The Contract Sum prior to this Change Order was	$	549,980.00
The Contract Sum will be increased by this Change Order in the amount of	$	10,492.33
The new Contract Sum including this Change Order will be	$	560,472.33

The Contract Time will be unchanged by Zero (0) days.
The new date of Substantial Completion will be Unchanged

NOTE: This Change Order does not include adjustments to the Contract Sum or Guaranteed Maximum Price, or the Contract Time, that have been authorized by Construction Change Directive until the cost and time have been agreed upon by both the Owner and Contractor, in which case a Change Order is executed to supersede the Construction Change Directive.

NOT VALID UNTIL SIGNED BY THE ARCHITECT, CONTRACTOR AND OWNER.

SFS Architecture	Royal Construction Services, LLC	City of Raytown
ARCHITECT *(Firm name)*	**CONTRACTOR** *(Firm name)*	**OWNER** *(Firm name)*
SIGNATURE	**SIGNATURE**	**SIGNATURE**
PRINTED NAME AND TITLE	**PRINTED NAME AND TITLE**	**PRINTED NAME AND TITLE**
DATE	**DATE**	**DATE**

AIA Document G701 – 2017. Copyright © 1979, 1987, 2000 , 2001 and 2017. All rights reserved. "The American Institute of Architects," "American Institute of Architects," "AIA," the AIA Logo, and "AIA Contract Documents" are trademarks of The American Institute of Architects. This draft was produced at 17:29:34 ET on 02/06/2025 under Order No.4104250575 which expires on 02/26/2025, is not for resale, is licensed for one-time use only, and may only be used in accordance with the AIA Contract Documents® Terms of Service. To report copyright violations, e-mail docinfo@aiacontracts.com.
User Notes: (3B9ADA48)

ROYAL CONSTRUCTION SERVICES, LLC

April 28th, 2025

Raytown Police Evidence Storage Building
10000 E. 59th St.
Raytown, MO 64133

Robinson Camp
Director of Public Work

RE: Added Dog Run – Revised based on new configuration

Robinson,

We are please to provide you a cost to add a dog run on the Northside of the Storage Building as called out by the City.

Total for this work: $6,270.94

Robinson, if you have any questions please don't hesitate to contact me.

Respectfully,

Chris VanSickle
Project Manager

Reviewed By Scott Vilas
04/29/2025 3:28:01 PM

2017 W. 104th St., Leawood, KS 66206 • Ph: (816) 886-7905 • Fx: (816) 886-6348

Raytown Police Evidence Storage Building

Description: Revised Dog Run	Total Hours	Labor	R-Con	Materials	Supplies	Equipment	Subcontractor
Project Management		$ -					
Superintendent Labor Hours		$ -					
Foreman Labor Hours		$ -					
Foreman Labor Overtime Hours		$ -					
Foreman Labor Premium ONLY Hours		$ -					
Carpenter Labor Hours		$ -					
Carpenter Labor Overtime Hours		$ -					
Carpenter Labor Premium ONLY Hours		$ -					
Laborer Hours		$ -					
Laborer Overtime Hours		$ -					
Laborer Premium ONLY Hours		$ -					
Purchased Materials:							
AmeriFence							$ 5,872.00
Subtotals	0.00	$ -	$ -	$ -	$ -	$ -	$ 5,872.00
SUBTOTAL:	**$ 5,872.00**						
Small Tools	$ -						
Bond:	$ 88.08						
General Liability	$ 3.52						
sales tax	$ -						
SUBTOTAL:	$ 5,963.60						
Profit on self performed work @15%	$ 13.74						
Profit on subcontracted work @ 5%	$ 293.60						
Total Proposal:	**$ 6,270.94**						

AMERIFENCE

Kansas City Wichita

Date: 4/29/2025

Transmittal

From: Chad Christensen
Amerifence
2901 E. 85th St.
Kansas City, MO 64132

To: Chris VanSickle
Royal Construction
2017 W 104th St
Leawood, KS 66206

Phone: 816-683-2291
Email: c.christensen@americafence.com

Phone: 816-665-9754
Email: chris.vansickle@royalcskc.com

Project: Raytown Police Storage C/O #2
RE:

We are transmitting the following to you:

☐ Product Data	☐ Samples	☐ O&M Manuals	☐ Plans	☐ Addenda
☐ Architectural Drawings	☐ Shop Drawings	☐ Specifications	☐ Prints	☐ RFP
☐ Engineering Drawings	☐ Letters	☐ Submittals	☐ RFI	☑ Change Order

Note: Failure to respond to this information withing three days may result in a project delay at the Contractor's expense.

Description of Change:

Provide and install approximately 80 LF of 8' tall galvanized chain link fencing with top rail and bottom tension wire (no middle rail). This includes (1) 4' gate with a fork latch. Posts to be set in concrete footings.

Provide and install (1) 4' gate with a fork latch in the 10' galvanized chain link fencing. Posts to be set in footings.
Prevailing wages included. Taxes excluded.

Scope Clarification:

Net Charge to Proposed Contract:	$5,872
Additional contract days required:	
Estimated completion date for change order:	
Based on the above respond by:	4/29/2025

Pricing and completion date based on the above terms and approval. Failure to advise by that date may result in additional mobilization(s), labor and material costs. American Fence Company reserves the right to re-evaluate this change if not approved by the time stated herein.

Contractor approval: _____ Date: _____

Dog Run Sketch Rev 2 - 04.29.25

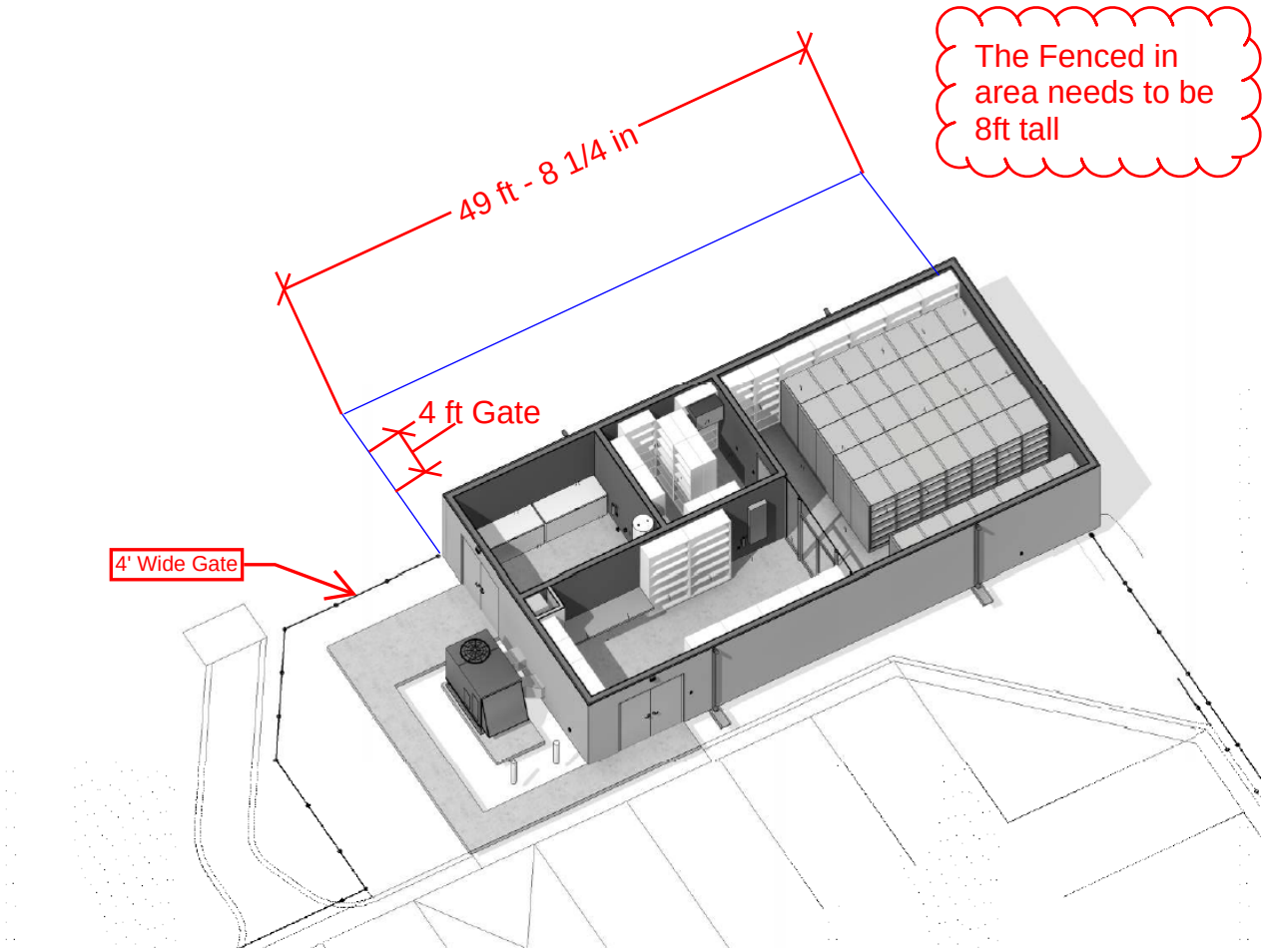

ROYAL CONSTRUCTION SERVICES, LLC

March 25th, 2025

Raytown Police Evidence Storage Building
10000 E. 59th St.
Raytown, MO 64133

Robinson Camp
Director of Public Work

RE: Plumbing Changes

Robinson,

We are pleased to provide you a cost to add a eyewash/sink and exterior hydrant as discussed.

Total for this work: $2,316.51

Robinson, if you have any questions please don't hesitate to contact me.

Respectfully,

Chris VanSickle
Project Manager

Reviewed By Scott Vilas
03/26/2025 9:27:21 AM

2017 W. 104th St., Leawood, KS 66206 • Ph: (816) 886-7905 • Fx: (816) 886-6348

Raytown PD Evidence Storage Bldg.

Description: Plumbing Changes	**Total Hours**	**Labor**	**R-Con**	**Materials**	**Supplies**	**Equipment**	**Subcontractor**
Project Management		$ -					
Foreman Labor Hours		$ -					
Foreman Labor Overtime Hours		$ -					
Foreman Labor Premium ONLY Hours		$ -					
Carpenter Labor Hours		$ -					
Carpenter Labor Overtime Hours		$ -					
Carpenter Labor Premium ONLY Hours		$ -					
Laborer Hours		$ -					
Laborer Overtime Hours		$ -					
Laborer Premium ONLY Hours		$ -					
Purchased Materials:							
Century Plumbing							$ 2,151.33
Subtotals	0.00	$ -		$ -	$ -	$ -	$ 2,151.33

SUBTOTAL:	**$ -**
Small Tools	$ -
Bond:	$ 32.27
General Liability	$ 12.91
sales tax	$ -
SUBTOTAL:	$ 45.18
Profit on self performed work @ 15%	$ 6.78
Profit on subcontracted work @ 5%	$ 113.23
Total Proposal:	**$ 2,316.51**

Century PLUMBING

Change Order Request # 1

March 24, 2025

Royal Construction Services
Chris Vansickle

RE: Raytown Police Storage
10000 East 59th Street
Raytown, Missouri 64133

Change:

Adding sink to the other side of animal control in the evidence processing area next to HVAC chase. Sink is a 16" x 15" x 14" stainless steel, wall hung, hand sink with a faucet mounted eye wash. Thermostatic mixing valve under the sink with p-trap insulation. Also adding a commercial outside faucet to the north side of building.

Below is a breakdown for your review.

Labor	Count		Unit Cost	Total	
Extra time accrued	10	@	$107.78	$1,077.80	
				Labor	**$1,077.80**

Material	Count		Unit Cost	Total	
Sink/Eye Wash & Outside Faucet	1	@	$563.74	$563.74	
Hook up/Rough in Material	1	@	$314.21	$314.21	
				Material	**$877.95**
				Total	**$1,955.75**
				O & P 10%	**$195.58**
				Total	**$2,151.33**

Please issue a change order to our contract for the amount listed above if the revisions are desired. Please let us know when and if this change order has approval, so that it can be reflected in future billing. appreciate the opportunity to serve your needs; if we may be of further service, please contact our office.

Sincerely,
Century Plumbing Co.

Ian Larkworthy

Ian Larkworthy -Estimator

14001 Century Lane, Grandview, MO 64030 Tel : 816.765.6066 Fax : 816.765.1920

4515 East 139th Street
Grandview, MO 64030
800-362-9055
Fax 800-362-1463
www.PRIER.com

C-634 Heavy Commercial Wall Hydrant

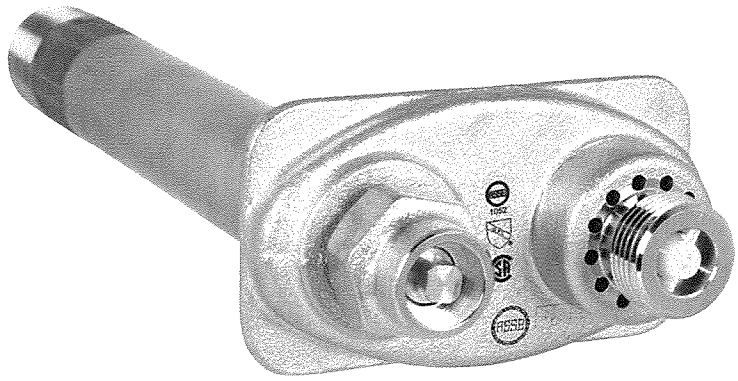

- **Commercial/Industrial**
- **Freezeless**
- **Anti-Siphon**
- **Backflow Check Valve**
- **Self Draining**
- **Quick Open / Close**

Application

The PRIER C-634 provides a year round source of water to areas of structures that are subject to freezing temperatures. The hydrant valve is connected to the supply piping in the heated portion of the structure, eliminating the possibility of freezing. To assure freeze protection, the hydrant will drain even with the hose attached and under pressure.

The integral vacuum breaker/backflow preventor provides protection against cross-connection with the potable water system, utilizing a check valve to prevent back pressure and a vacuum breaker to vent in the case of siphonage. A removable operating key is provided to prevent unauthorized usage of the hydrant. No special installation tools are required.

Features

- High flow rate, independent 3rd party tested to flow 19 gallons per minute at 25 PSI differential.
- Heavy pattern cast brass hydrant for use with or without brass or satin nickel box
- Satin nickel plated body retains original finish for years
- Heavy duty brass piping, significantly stronger than ordinary copper tubing, with threaded and sealed joints
- Simple, solderless design and solid non-ferrous operating rod for long wear life
- Patented PRIER "Triple Seal" positive shutoff system offers triple redundancy to assure shutoff
- Patented PRIER quick opening and modulating design require less force and fewer turns to operate
- *Both* 3/4" and 1" hose threads meet ASSE 1019 or ASSE 1052 & CSA B64.2 standards, listed at ASSE, CSA and IAPMO
- Vacuum breaker operates at lower differential and features self cleaning design to prevent clogging
- Multiple vent holes ensure proper draining and reduce problems associated with insect nesting
- Design enables valve to be easily secured to any type of inner wall, utilizing the provided clamping ring
- Single hole design assists in installation, the product is ideal for tilt-up construction, stone fronts or metal buildings.

Ordering

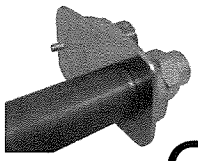

Wall Hydrant Only

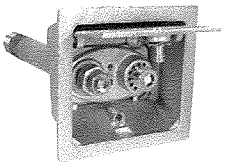

Optional Hydrant Box

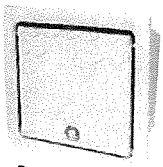

C-634N12

C-634BX1

Hose Thread Outlet
4- ¾" Garden Hose
6- 1" Hose

Inlet
N- 1" MPT x ¾" FPT
P- 1" Male SWT x ¾" Female SWT

Length
CC- Close Coupled
04- 4" Insertion
06- 6" Insertion
08- 8" Insertion
10- 10" Insertion
12- 12" Insertion
14- 14" Insertion
16- 16" Insertion
18- 18" Insertion
20- 20" Insertion
22- 22" Insertion
24- 24" Insertion
XX- Special Size

Box Finish
1-Satin Nickel Plated
2-Rough Brass

PRIER
4515 East 139th Street
Grandview, MO 64030
800-362-9055
Fax 800-362-1463

C-634

Rough-In Dimensions

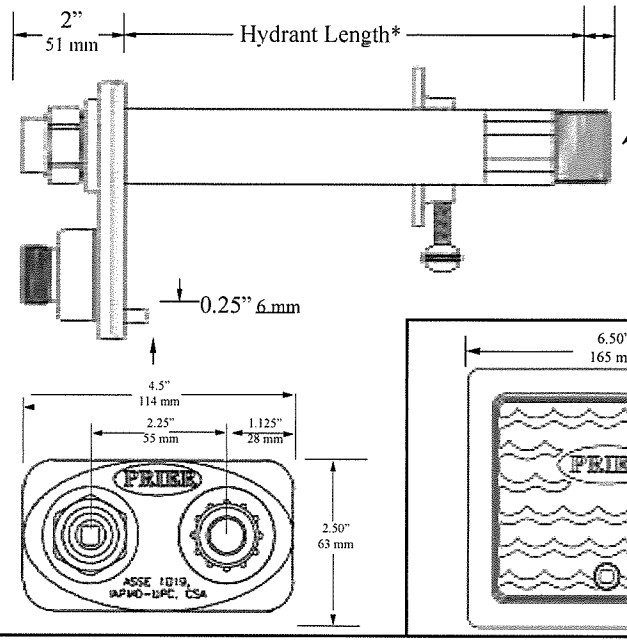

***Standard Sizes**

CC-2"-51 mm	14"-356 mm
4"-102 mm	16"-406 mm
6"-152 mm	18"-457 mm
8"-203 mm	20"-508 mm
10"-254 mm	22"-559 mm
12"-305 mm	24"-607 mm

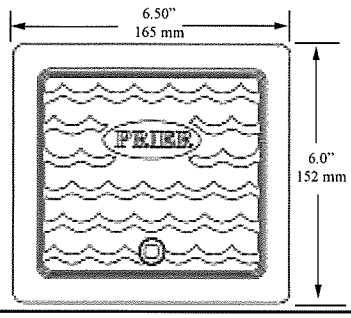

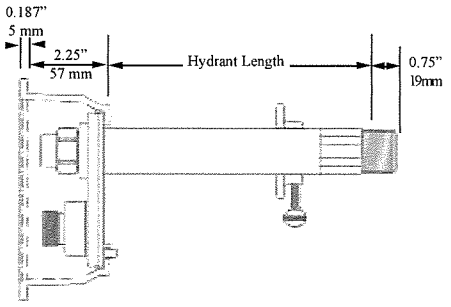

Specifications

Furnish and install Model C-634 Commercial key operated Wall Hydrant manufactured by PRIER Products, Inc. Hydrant shall be surface mount and installed through 1 3/8" round opening. Hydrant shall have automatic draining capabilities with integral vacuum breaker/backflow preventor. Hydrant shall flow 19 gallons per minute minimum at 25 PSI Differential and be at full flow in 2 handle rotations. Hydrant shaft shall be brass with threaded and sealed connections. Hydrant shall have 3/4" or 1" (Choose one) hose connection with freezeless water flow and self-draining functions, one piece valve plunger, satin nickel finish, brass operating rod with positive triple seal shutoff mechanism. Hydrant shall be approved under ASSE 1052 standard. Operating key & wall clamping ring to be furnished with each hydrant. Hydrant insertion length to be _*_ inches.

Optional: Furnish and install flush-mount hydrant box for each valve. Hydrant box shall be manufactured of solid cast brass with a Brass / Satin Nickel Plated Brass (Choose one) finish. Box may be installed separately and hydrant be insertable and removable from front of the box. Access to the hydrant box shall be provided by the same operating key as the valve. ** Close Coupled to 24" in 2" increments.*

Parts & Materials

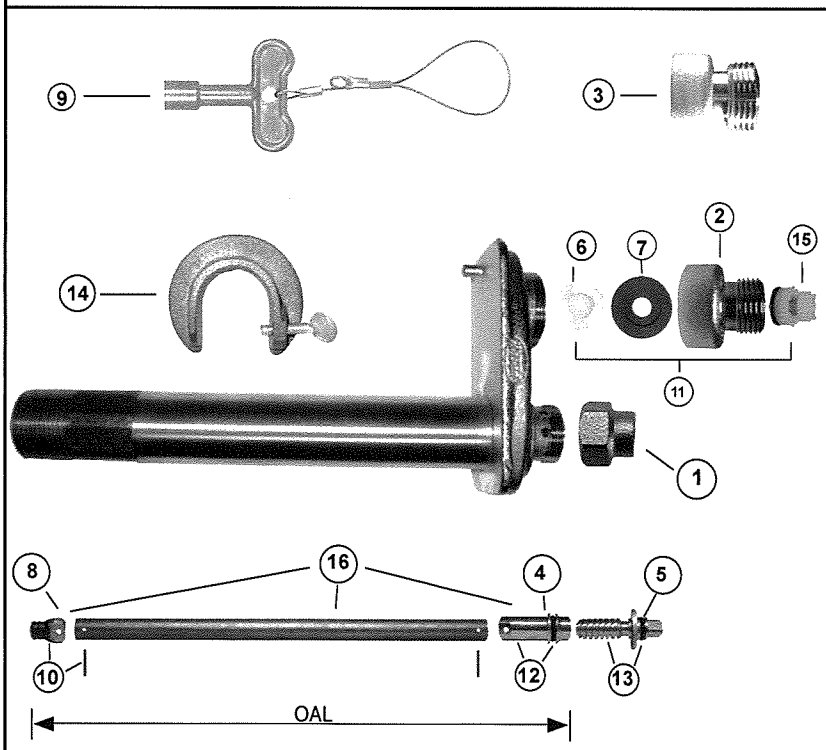

ID	Part Number	Description
1	300-6003	Valve Stem Cap- NP Brass
2	300-6004	3/4" Hose Piece- NP Brass
3	310-6009	1" Hose Piece- NP Brass (for C-636)
4	336-0001	O-Ring Worm Sleeve
5	336-6001	O-Ring Worm Drive
6	337-6001	Check Spider-Vacuum Breaker
7	346-6001	Diaphragm- Vacuum Breaker
8	399-6001	Stopper
9	C-108KT-808	Operating Key on Lanyard
10	C-634KT-802	Stopper Kit with Tool
11	C-634KT-806	Vacuum Breaker Assembly
12	C-634KT-808	Worm Sleeve with O-Ring and Tool
13	C-634KT-809	Worm Drive Assembly (with O-Ring)
14	C-634WCR	Clamping Ring
15	399-0001	Secondary Check for ASSE 1052
	C-634KT-807	Overhaul Kit: 9, 10, 11, 12, 13
16	231-06CC	Stem for CC C-634 2 11/16" OAL
	231-0604	Stem for 4" new C-634 4 11/16" OAL
	231-0606	Stem for 6" new C-634 6 11/16" OAL
	231-0608	Stem for 8" new C-634 8 11/16" OAL
	231-0610	Stem for 10" new C-634 10 11/16" OAL
	231-0612	Stem for 12" new C-634 12 11/16" OAL
	231-0614	Stem for 14" new C-634 14 11/16" OAL
	231-0616	Stem for 16" new C-634 16 11/16" OAL
	231-0618	Stem for 18" new C-634 18 11/16" OAL
	231-0620	Stem for 20" new C-634 20 11/16" OAL
	231-0622	Stem for 22" new C-634 22 11/16" OAL
	231-0624	Stem for 24" new C-634 24 11/16" OAL

GRANDVIEW Winnelson™ COMPANY

Mar 19, 2025

RAYTOWN POLICE STORAGE

CENTURY PLUMBING

NAME Travis Overholtzer

EMAIL 277@winnelson.com

SpecBooks

Table of Contents

VENDOR PART	VENDOR	DESCRIPTION	PAGE
HS-2L SINK & FAUCET			
HS-2L	Krowne	- 16" Wide Hand Sink	4
G1100 FAUCET MOUNT EYEWASH			
G1100	Guardian	Eye Safe Faucet Mounted Eye Wash	7
LFG-480 MIXING VALVE			
LFG480	Powers	Hydroguard Lead Free* Series	10

VENDOR PART	VENDOR	DESCRIPTION	PAGE
HS-2L	Krowne	- 16" Wide Hand Sink	4

HAND SINKS

WALL MOUNT HAND SINKS

MODEL: _____ PROJECT: _____ ITEM #: _____ QTY: _____

PRODUCT IMAGES

STANDARD FEATURES

- **Fabrication**
  20 gauge stainless steel. All seams tig welded and polished
- **Bowl**
  Deep drawn with stamped rim to prevent spillage
- **Wall Mounting Bracket**
  Offset design for added strength
- **Faucet**
  4" on center wall mount faucet included on most models
- **Drain**
  Stainless Steel
- **Drain with Overflow**
  Stainless Steel with plastic overflow tube and inlet
- **Plumbing**
  1/2" IPS hot and cold water. 1 1/2" IPS drain outlet. Install at 36" working height. 1/2" faucet supply 12" from floor. 1 1/2" drain line 23 1/4" from floor. (3 1/2" IPS drain on Model HS-20)
- **Low Lead Compliance**
  Low Lead Compliant faucet options are available to meet California AB-1953 and Vermont S152 standards

OPTIONAL ACCESSORIES

- **H-100** Chrome Plated 1 1/2" IPS P-Trap
- **H-101** Deck Mount Soap Dispenser
- **H-102** **Upgrade:** Low Lead Wrist Handle Faucet
- **H-103** Wrist Handle Kit
- **H-104** Wall Mount Soap Dispenser
- **H-105** Wall Mount Towel Dispenser
- **H-106** One Side Splash (Specify Side)
- **H-107** Two Side Splashes
- **H-108** Stainless Steel Skirt
- **H-109** **Upgrade:** Low Lead Royal Series Faucet
- **H-110** Side Support Brackets
- **H-111** Soap & Towel Dispenser
- **H-200** **Upgrade:** Low Lead Commercial Series Faucet

CERTIFICATIONS:

APPROVED BY:

Due to our commitment to continued product improvement, specifications are subject to change without notice.

Printed in the USA

Krowne Metal Corporation
100 Haul Rd. Wayne, NJ 07470 • Toll Free: (800) 631-0442 • Fax: (973) 872-1129
sales@krowne.com • www.krowne.com • www.facebook.com/KrowneMetal • www.twitter.com/KrowneMetal

Rev. 1/2013
No. 2.1

HAND SINKS

WALL MOUNT HAND SINKS

MODEL: _____ PROJECT: _____ ITEM #: _____ QTY: _____

WALL MOUNT HAND SINKS

HS-9

12 lbs.

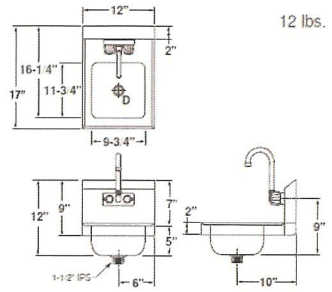

HS-2

14 lbs.

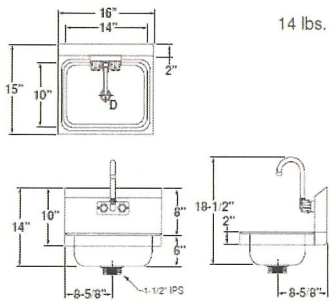

HS-4

14 lbs.

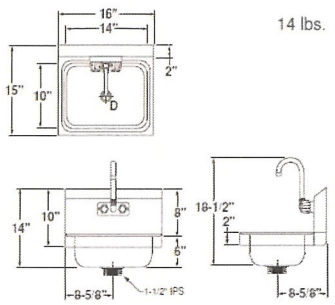

HS-5

15 lbs.

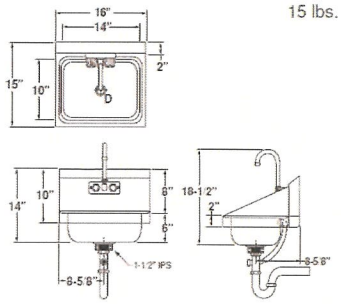

HS-6

11 lbs

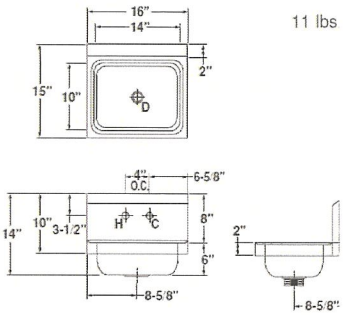

HS-7

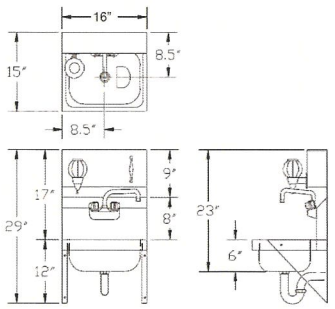

HS-8

35 lbs.

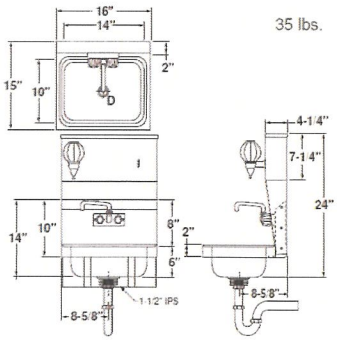

HS-10

19 lbs.

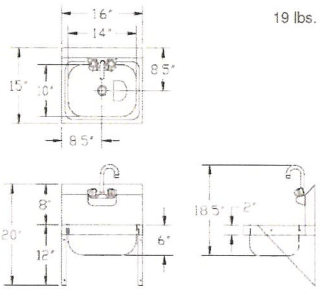

HS-20

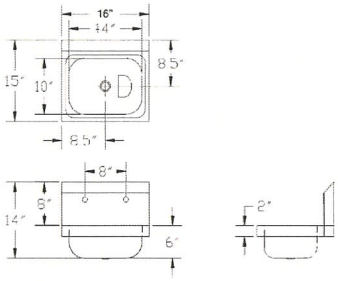

CERTIFICATIONS:

APPROVED BY:

Due to our commitment to continued product improvement, specifications are subject to change without notice.

Printed in the USA

Krowne Metal Corporation
100 Haul Rd. Wayne, NJ 07470 • Toll Free: (800) 631-0442 • Fax: (973) 872-1129
sales@krowne.com • www.krowne.com • www.facebook.com/KrowneMetal • www.twitter.com/KrowneMetal

Rev. 1/2013
No. 2.1

G1100 FAUCET MOUNT EYEWASH

VENDOR PART	VENDOR	DESCRIPTION	PAGE
G1100	Guardian	Eye Safe Faucet Mounted Eye Wash	7

Guardian

Faucet-Mounted Units

G1100 EyeSafe™ Faucet-Mounted Eyewash, Adjustable Aerated Outlet Heads

Application: EyeSafe™ faucet-mounted eyewashes convert any faucet into an emergency eyewash station without interfering with normal faucet operation. An EyeSafe™ unit can be installed at any sink, close to where accidents might occur. In an emergency, unit is quickly located and activated, and provides an unlimited supply of potable water for rinsing the user's eyes.

Outlet Heads: Outlet heads are mounted 3" apart and deliver a soft, aerated flow of water. Heads angle forward toward user. Angle of heads is adjustable to permit full coverage and avoid splashing. Furnished with float-off dust covers to protect outlet heads.

Valve: Forged brass diverter valve. Pull knob to activate eyewash; water pressure holds eyewash in operation, leaving user's hands free. Push knob or turn off faucet to return to normal faucet operation.

Inlet: Body has 55/64"-27 female thread. Furnished with three adaptors (15/16"-27, 13/16"-27 and 3/8" IPS) for installing on most commonly used faucets, including laboratory-type faucets.

Outlet: Furnished with removable aerator on bottom.

Quality Assurance: Each unit is completely assembled and water tested prior to shipment.

IMPORTANT: *Faucet-mounted eyewashes, whether manufactured by Guardian Equipment or other companies, require two motions to operate (turn on water, pull knob to activate eyewash flow). Therefore, Guardian Equipment does not believe that these units meet the provisions of ANSI Z358.1-2014 as eyewash units. These units are intended solely as supplemental units in addition to dedicated, plumbed eyewash equipment installed in the workplace.*

Faucet-mounted eyewashes should be used with cold or warm water only. Use of hot water might cause scalding.

Available Options

- **AP400-012** Inlet adaptor with 13/16"-24 female thread.
- **250-046R** Replacement float-off dust covers (package of 2).

Guardian Equipment
1140 N North Branch St
Chicago, IL 60642

312 447 8100 TELEPHONE
312 447 8101 FACSIMILE
gesafety.com

Guardian

Faucet-Mounted Units

G1100 EyeSafe™ Faucet-Mounted Eyewash, Adjustable Aerated Outlet Heads

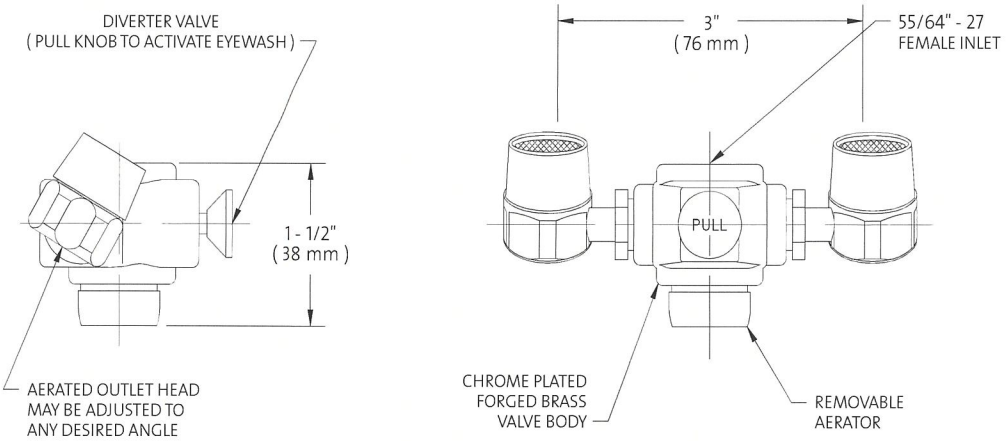

15/16" - 27 ADAPTOR

13/16" - 27 ADAPTOR

3/8" IPS ADAPTOR

Distributed by:
Safety Emporium
PO Box 1003
Blackwood, NJ 08012

Ph: (866) 326-5412 toll-free
Fax: (856) 553-6154
esupport@safetyemporium.com
www. safetyemporium.com

NOTES:
1. USE COLD OR WARM WATER ONLY WITH FAUCET-MOUNTED EYEWASH.
2. THIS UNIT IS INTENDED AS A SUPPLEMENT TO, BUT NOT A REPLACEMENT FOR, DEDICATED PLUMBED-IN EYEWASH EQUIPMENT.

THIS SPACE FOR ARCHITECT/ENGINEER APPROVAL

Sign Included

Due to continuing product improvement, the information contained in this document is subject to change without notice. All dimensions are ± 1/4" (6mm). rev. 0115

Guardian Equipment
1140 N North Branch St
Chicago, IL 60642

312 447 8100 TELEPHONE
312 447 8101 FACSIMILE
gesafety.com

VENDOR PART	VENDOR	DESCRIPTION	PAGE
LFG480	Powers	Hydroguard Lead Free* Series	10

POWERS™

ES-P-LFe480_LFG480

Series LFe480 and LFG480 Lavatory Tempering Valve

Product Specification

LEAD FREE*

Advanced Thermal Actuation

Features ■

- Adjustable temperature selection with locknut to prevent tampering
- Advanced thermal actuator improves performance
- Temperature controls to ASSE 1070, down to 0.5 gpm for LFe480 & 0.25 gpm for LFG480
- Lead Free* brass body for durability & to comply with Lead Free* installation requirements
- Corrosion resistant internal components for extended life
- Integral checks with screens prevents cross flow and filter out debris
- Factory set to 105° F (41° C)

Specifications ■

Connections	See ordering code
Maximum Operating Pressure	125psi (861 kPa)
Maximum Hot Water Temperature	180°F (82°C)
Minimum Hot Water Supply Temperature	5°F (3°C) above set point+
Hot Water Inlet Temperature Range	120 – 180°F (49 – 82°C)
Cold Water Inlet Temperature Range	40 – 80°F (4 – 27°C)
Temperature Adjustment Range	80 – 120°F (27 – 49°C)
Minimum Flow	
LFe480	0.5 gpm (1.9 lpm)
LFG480	0.25 gpm (1.0 lpm)
Listing	ASSE 1070, IAPMO cUPC
Approval	CSA B125.3

** The wetted surface of this product contacted by consumable water contains less than 0.25% of lead by weight.*

+ With Equal Pressure

Flow Capacity ■

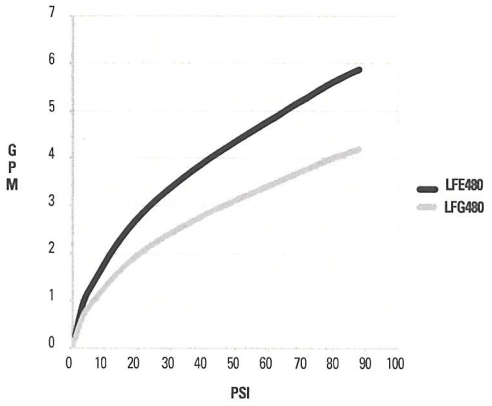

NOTICE

The information contained herein is not intended to replace the full product installation and safety information available or the experience of a trained product installer. You are required to thoroughly read all installation instructions and product safety information before beginning the installation of this product.

POWERS™

www.powerscontrols.com

Dimensions ■

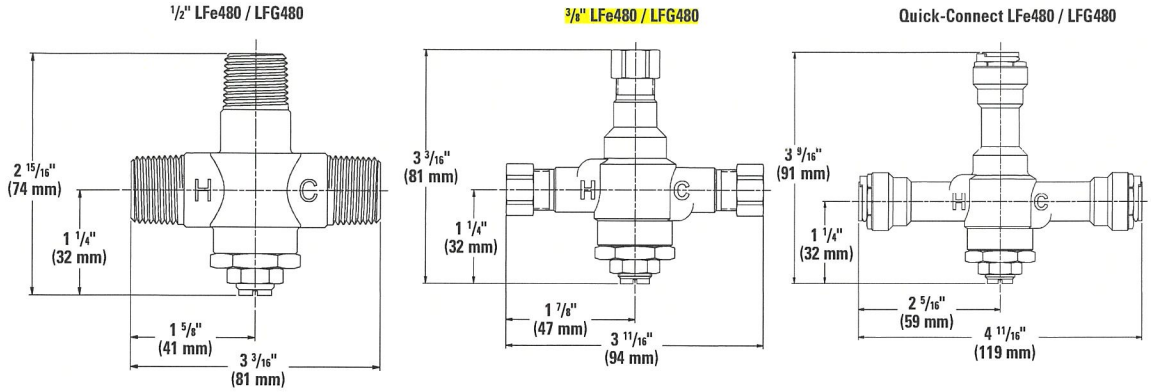

Piping Diagram ■

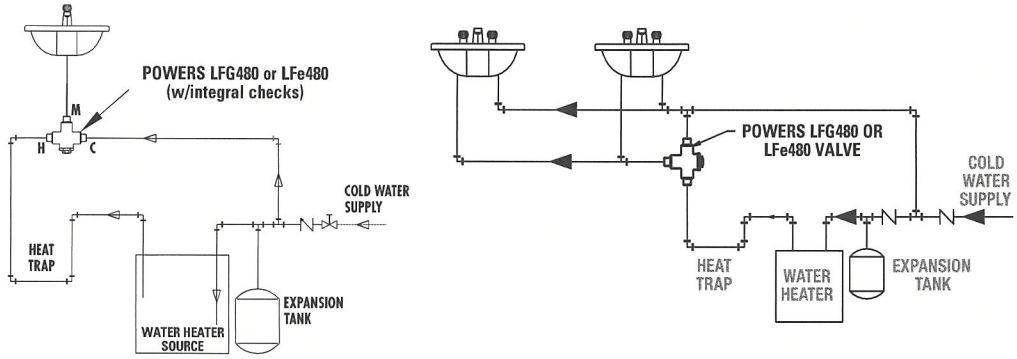

Ordering Code ■

Order Code

0.25 gpm minimum flow	LFG480
0.50 gpm minimum flow	LFE480

1/2" NPT Rough Bronze Finish	00
1/2" NPT Chrome Plated Finish	01
3/8" Compression Rough Bronze Finish	10
3/8" Compression Chrome Plated Finish	11
3/8" Quick-Connect Rough Bronze Finish	50
3/8" Quick-Connect Chrome Plated Finish	51

Typical Specification ■

Lavatory tempering valve shall be ASSE 1070 and cUPC listed. All internal components shall be from corrosion resistant material. The valve must control each performance standard down to 0.25 gpm (1.00 lpm) for LFG480 and 0.5 gpm (1.90 lpm) for LFe480.

Capacity of the valve must be 3 gpm (11 lpm) @ 45psi differential or 4 gpm (15 lpm) @ 45psi differential. Thermostatic lavatory tempering valve shall be constructed using Lead Free* brass material which shall comply with state codes and standards, where applicable requiring reduced lead content. Control temperature must be adjustable between 80 - 120° F (32-43°C) with a locking nut to prevent unauthorized or accidental adjustment. The valve shall contain integral checks to prevent cross flow and inlet screens to filter debris. The valve shall be a Powers Series LFe480 or LFG480.

ENGINEERING APPROVAL

Project: _____
Contractor: _____
Architect/Engineer: _____

POWERS™

A Watts Water Technologies Company

USA: Tel: (800) 669-5430 • Fax: (847) 229-0526 • PowersControls.com
Canada: Tel: (905) 332-4090 • Fax: (905) 332-7068 • PowersControls.ca
Latin America: (52) 81-1001-8600 • Fax: (52) 81-8000-7091 • PowersControls.com

© 2014 Powers

COR #08

March 25th, 2025

Raytown Police Evidence Storage Building
10000 E. 59th St.
Raytown, MO 64133

Robinson Camp
Director of Public Work

RE: Maglock @ Interior Fencing

Robinson,

We are pleased to provide you a cost to add a maglock and closer @ the interior chain link fencing.

Total for this work: $1,577.49

Robinson, if you have any questions please don't hesitate to contact me.

Respectfully,

Chris VanSickle
Project Manager

Reviewed By Scott Vilas
04/23/2025 3:23:27 PM

2017 W. 104th St., Leawood, KS 66206 • Ph: (816) 886-7905 • Fx: (816) 886-6348

Raytown PD Evidence Storage Bldg.

Description: Maglock @ interior fencing	**Total Hours**	**Labor**	**R-Con**	**Materials**	**Supplies**	**Equipment**	**Subcontractor**
Project Management		$ -					
Foreman Labor Hours		$ -					
Foreman Labor Overtime Hours		$ -					
Foreman Labor Premium ONLY Hours		$ -					
Carpenter Labor Hours		$ -					
Carpenter Labor Overtime Hours		$ -					
Carpenter Labor Premium ONLY Hours		$ -					
Laborer Hours		$ -					
Laborer Overtime Hours		$ -					
Laborer Premium ONLY Hours		$ -					
Purchased Materials:							
AmeriFence							$ 1,465.00
Subtotals	0.00	$ -		$ -	$ -	$ -	$ 1,465.00
SUBTOTAL:	**$ -**						
Small Tools	$ -						
Bond:	$ 21.98						
General Liability	$ 8.79						
sales tax	$ -						
SUBTOTAL:	$ 30.77						
Profit on self performed work @ 15%	$ 4.61						
Profit on subcontracted work @ 5%	$ 77.11						
Total Proposal:	**$ 1,577.49**						

AMERIFENCE

Kansas City Wichita

Date: 3/25/2025

Transmittal

From: Chad Christensen
Amerifence
2901 E. 85th St.
Kansas City, MO 64132

To: Chris VanSickle
Royal Construction
2017 W 104th St
Leawood, KS 66206

Phone: 816-683-2291
Email: c.christensen@americafence.com

Phone: 816-665-9754
Email: chris.vansickle@royalcskc.com

Project: Raytown Police Storage C/O #1
RE:

We are transmitting the following to you:

☐ Product Data	☐ Samples	☐ O&M Manuals	☐ Plans	☐ Addenda
☐ Architectural Drawings	☐ Shop Drawings	☐ Specifications	☐ Prints	☐ RFP
☐ Engineering Drawings	☐ Letters	☐ Submittals	☐ RFI	☑ Change Order

Note: Failure to respond to this information withing three days may result in a project delay at the Contractor's expense.

Description of Change:

Provide and install approximately 12 LF of 10' tall galvanized chain link fencing. This includes (1) 6' wide double swing gate. One side to have a lockable drop rod. Posts to be set in plated and anchored to existing concrete -$4,759
One side to have a maglock and closer- $1,465

Scope Clarification:

Net Charge to Proposed Contract:	$6,224
Additional contract days required:	
Estimated completion date for change order:	
Based on the above respond by:	3/17/2025

Pricing and completion date based on the above terms and approval. Failure to advise by that date may result in additional mobilization(s), labor and material costs. American Fence Company reserves the right to re-evaluate this change if not approved by the time stated herein.

Contractor approval: _____ Date: _____

AFC Representative: Chad Christensen Date: 3/17/2025

ROYAL CONSTRUCTION SERVICES, LLC

March 27th, 2025

Raytown Police Evidence Storage Building
10000 E. 59th St.
Raytown, MO 64133

Robinson Camp
Director of Public Work

RE: Plumbing Lines Rerouting

Robinson,

We are pleased to provide you a cost to take the plumbing lines out of the attic and route them below ceiling to avoid freezing pipes.

Total for this work: $1,265.49

Robinson, if you have any questions please don't hesitate to contact me.

Respectfully,

Chris VanSickle
Project Manager

Reviewed By Scott Vilas
03/27/2025 11:45:10 AM

2017 W. 104th St., Leawood, KS 66206 • Ph: (816) 886-7905 • Fx: (816) 886-6348

Raytown PD Evidence Storage Bldg.

Description: Plumbing lines rerouting	**Total Hours**	**Labor**	**R-Con**	**Materials**	**Supplies**	**Equipment**	**Subcontractor**
Project Management		$ -					
Foreman Labor Hours		$ -					
Foreman Labor Overtime Hours		$ -					
Foreman Labor Premium ONLY Hours		$ -					
Carpenter Labor Hours		$ -					
Carpenter Labor Overtime Hours		$ -					
Carpenter Labor Premium ONLY Hours		$ -					
Laborer Hours		$ -					
Laborer Overtime Hours		$ -					
Laborer Premium ONLY Hours		$ -					
Purchased Materials:							
Century Plumbing							$ 1,175.25
Subtotals	0.00	$ -		$ -	$ -	$ -	$ 1,175.25
SUBTOTAL:	**$ -**						
Small Tools	$ -						
Bond:	$ 17.63						
General Liability	$ 7.05						
sales tax	$ -						
SUBTOTAL:	$ 24.68						
Profit on self performed work @ 15%	$ 3.70						
Profit on subcontracted work @ 5%	$ 61.86						
Total Proposal:	**$ 1,265.49**						

Century PLUMBING

Change Order Request # 2

March 27, 2025

Royal Construction Services
Chris Vansickle

RE: Raytown Police Storage
10000 East 59th Street
Raytown, Missouri 64133

Reason for Change:

Due to the water lines being engineered to run in the attic (Unconditioned space) where pipes are subject to freezing conditions. To solve this issue we are putting the main water line below the ceiling.

Below is a breakdown for your review.

Labor	Count		Unit Cost	Total	
Extra time accrued	8	@	$107.78	$862.24	
				Labor	**$862.24**

Material	Count		Unit Cost	Total	
Pipe & Fittings	1	@	$206.17	$206.17	
				Material	**$206.17**
				Total	**$1,068.41**
				O & P 10%	**$106.84**
				Total	**$1,175.25**

Please issue a change order to our contract for the amount listed above if the revisions are desired. Please let us know when and if this change order has approval, so that it can be reflected in future billing. appreciate the opportunity to serve your needs; if we may be of further service, please contact our office.

Sincerely,
Century Plumbing Co.

Ian Larkworthy

Ian Larkworthy -Estimator

14001 Century Lane, Grandview, MO 64030 Tel : 816.765.6066 Fax : 816.765.1920

ROYAL CONSTRUCTION SERVICES, LLC

April 1st, 2025

Raytown Police Evidence Storage Building
10000 E. 59th St.
Raytown, MO 64133

Robinson Camp
Director of Public Work

RE: Conduit for shed

Robinson,

We are pleased to provide you a cost to add a conduit from the new electrical panel to the location of the shed outside of the building.

Total for this work: $1,724.36

Robinson, if you have any questions please don't hesitate to contact me.

Respectfully,

Chris VanSickle
Project Manager

Reviewed By Scott Vilas
04/23/2025 3:22:49 PM

2017 W. 104th St., Leawood, KS 66206 • Ph: (816) 886-7905 • Fx: (816) 886-6348

Raytown PD Evidence Storage Bldg.

Description: Conduit to shed location	**Total Hours**	**Labor**	**R-Con**	**Materials**	**Supplies**	**Equipment**	**Subcontractor**
Project Management	3.00	$ 300.00					
Foreman Labor Hours		$ -					
Foreman Labor Overtime Hours		$ -					
Foreman Labor Premium ONLY Hours		$ -					
Carpenter Labor Hours		$ -					
Carpenter Labor Overtime Hours		$ -					
Carpenter Labor Premium ONLY Hours		$ -					
Laborer Hours		$ -					
Laborer Overtime Hours		$ -					
Laborer Premium ONLY Hours		$ -					
Purchased Materials:							
FatBoy Electric							$ 1,281.00
Subtotals	3.00	$ 300.00		$ -	$ -	$ -	$ 1,281.00
SUBTOTAL:	**$ 300.00**						
Small Tools	$ -						
Bond:	$ 19.22						
General Liability	$ 7.69						
sales tax	$ -						
SUBTOTAL:	$ 326.90						
Profit on self performed work @ 15%	$ 49.04						
Profit on subcontracted work @ 5%	$ 67.42						
Total Proposal:	**$ 1,724.36**						

PROPOSAL

P.O. Box 300198
Kansas City, MO 64130
Phone 816-861-6600 Fax 816-861-6606

April 1, 2025

Attention: **Chris Vansickle**
Royal Construction

RE: **Raytown Police Evidence, Raytown**, MO – Power for Shed

We are pleased to quote the electrical installation per plans and specs, with the following qualifications and exclusions:

Qualifications:

• Provide 1" conduit from panel to shed location. Includes conduit, fittings, LB's, and junction boxes. Prevailing Wage included. No wire or breaker included.

Exclusions:

• Bid is good for 30 days on labor and workmanship.
• Commodity pricing (Conduit, wire, etc.) valid for 7 Days.
• Based upon non-union and non-prevailing wage labor only.
• Must be able to obtain any required electrical permits using prints provided. Any additional architectural or engineered drawings will incur an additional charge.
• Backfill, fill rock, and concrete by others.
• No plywood or painting for phone boards.
• No utility charges.
• If rock hit, hourly rate and haul off charges will apply
• No low voltage wiring (stat, fire alarm, CCTV, access, CATV, BMS, etc) unless specifically listed.

BID PRICE - $1,281.00

(Continued on next page)

We would like to thank you for the opportunity to quote this project. If you have any questions, please call us.

Respectfully Submitted: Kory Brinton - Estimator

ACCEPTANCE OF PROPOSAL

The above prices, specifications and conditions are satisfactory and are hereby accepted.
You are authorized to do the work as specified.

Date:_____ **Signature:**_____

Title:_____

ROYAL CONSTRUCTION SERVICES, LLC

April 23rd , 2025

Raytown Police Evidence Storage Building
10000 E. 59th St.
Raytown, MO 64133

Robinson Camp
Director of Public Work

RE: Concealing Pipe in Existing Building – REV 01

Robinson,

We are pleased to provide you with a cost to place drywall and paint in order to conceal the exposed pipe in the detention area.

Total for this work: $2,193.10

Robinson, if you have any questions please don't hesitate to contact me.

Respectfully,

Chris VanSickle
Project Manager

Reviewed By Scott Vilas
04/23/2025 1:30:44 PM

2017 W. 104th St., Leawood, KS 66206 • Ph: (816) 886-7905 • Fx: (816) 886-6348

Raytown PD Evidence Storage Bldg.

Description: Drywall/Paint around Pipe	**Total Hours**	**Labor**	**R-Con**	**Materials**	**Supplies**	**Equipment**	**Subcontractor**
Project Management		$ -					
Foreman Labor Hours		$ -					
Foreman Labor Overtime Hours		$ -					
Foreman Labor Premium ONLY Hours		$ -					
Carpenter Labor Hours		$ -					
Carpenter Labor Overtime Hours		$ -					
Carpenter Labor Premium ONLY Hours		$ -					
Laborer Hours		$ -					
Laborer Overtime Hours		$ -					
Laborer Premium ONLY Hours		$ -					
Purchased Materials:							
4-Gen Construction							$ 2,036.72
Subtotals	0.00	$ -		$ -	$ -	$ -	$ 2,036.72
SUBTOTAL:	**$ -**						
Small Tools	$ -						
Bond:	$ 30.55						
General Liability	$ 12.22						
sales tax	$ -						
SUBTOTAL:	$ 42.77						
Profit on self performed work @ 15%	$ 6.42						
Profit on subcontracted work @ 5%	$ 107.20						
Total Proposal:	**$ 2,193.10**						

4 Gen Construction Inc. | MBE/DBE CERTIFIED

Bid to: Royal Construction
Description of Job: Raytown Police Storage
Estimated by: Scott Krantz 816-935-7759
Ticket # Column
Date: 4/16/2025

101 SE 30 St.
Lee's Summit, MO. 64082

Description of Work:
Frame and hang a column around water line up to the grid. Tape, fill, finish, sand, & paint.

Exclusions:

			Rates	Total
Carpenter	8	hrs	$80.79	$646.32
Taper	16	hrs	$70.79	$1,132.64
Laborer	0	hrs	$65.01	$0.00
Painter	0	hrs	$70.79	$0.00
		Labor Subtotal		$1,778.96
		OH & P	10%	$177.90
		Labor Total		$1,956.86
		Material Subtotal		$72.60
		Tax	0.0%	$0.00
		Subtotal		$72.60
		OH & P	10%	$7.26
		Material Total		$79.86
		Total Bid		$2,036.72

Material List	Carp Hr.	Tape Hr.	Laborer Hr.	Painter Hr.	Qty	UOM	Price	Total
Carpenter	8							$0.00
Taper/Painter		16						$0.00
Drwyall					40	sqft	$ 0.54	$21.60
Light ga. Stud					40	lf	$ 0.57	$22.80
Light ga. Track					10	lf	$ 0.52	$5.20
Tape					1	roll	$ 4.00	$4.00
Mud					1	box	$ 14.00	$14.00
Sponges					1	bundle	$ 5.00	$5.00
								$0.00
								$0.00
								$0.00
								$0.00
								$0.00
								$0.00
								$0.00

RESOLUTION NO.: R-3672-24

A RESOLUTION AUTHORIZING THE CITY ADMINISTRATOR TO ENTER INTO AN AGREEMENT WITH ROYAL CONSTRUCTION SERVICES FOR THE POLICE DEPARTMENT ANNEX BUILDING DEMOLITION AND CONSTRUCTION PROJECT IN AN AMOUNT NOT TO EXCEED $549,980.00 FOR FISCAL YEAR 2024-2025

WHEREAS, the City of Raytown (the "City") issued a invitation to bid on its Police Department Annex Building Demolition and Construction Project; and

WHEREAS, the Public Works Department received five (5) bids in response to the invitation and has determined that the bid submitted by Royal Construction Services in the amount of $443,000.00 for the Police Department Annex Building Demolition and Construction Project was the most advantageous bid received; and

WHEREAS, the City finds Royal Construction Services meets all of the qualifications as the lowest and best bidder for the project; and

WHEREAS, the Board of Aldermen find it is in the best interest of the City to enter into an agreement with Royal Construction Services for the Police Department Annex Building Demolition and Construction including shelving and a humidifier in the amount of $514,000.00; and

WHEREAS, the Board of Aldermen find it is in the best interest of the City to authorize and approve an additional $35,980.00 to fund any changes in the project for a total project amount not to exceed $549,980.00; and

NOW THEREFORE, BE IT RESOLVED BY THE BOARD OF ALDERMEN OF THE CITY OF RAYTOWN, MISSOURI, AS FOLLOWS:

THAT the Board of Aldermen find it is in the best interest of the City to enter into an agreement with Royal Construction Services attached hereto as Exhibit "A" and incorporated herein, for the Police Department Annex Building Demolition and Construction Project including shelving and a humidifier, in the amount of $514,000.00 for fiscal year 2024-2025, is hereby authorized and approved; and

FURTHER THAT the Board of Aldermen find it is in the best interest of the City to authorize and approve an additional $35,980.00 to fund any changes in the project for a total project amount not to exceed $549,980.00; and

FURTHER THAT the City Administrator is hereby authorized to execute all documents necessary and to take any and all actions necessary to effectuate the terms of the contract and the City Clerk is authorized to attest to the same.

PASSED AND ADOPTED by the Board of Aldermen and **APPROVED** by the Mayor of the City of Raytown, Missouri, the 3rd day of December, 2024.

Michael McDonough, Mayor

ATTEST:

Teresa M. Henry, City Clerk

Approved as to Form:

Jennifer M. Baird, City Attorney

V:\Board of Aldermen Meetings\AGENDAS-BOARD OF ALDERMEN\Agendas 2024\12-03-24\Reso Police Department Annex Building Demolition-Royal Construction 2024-2025.doc